GLOSS BOSS MT-2500 (9 FT) – HYDRAULICS

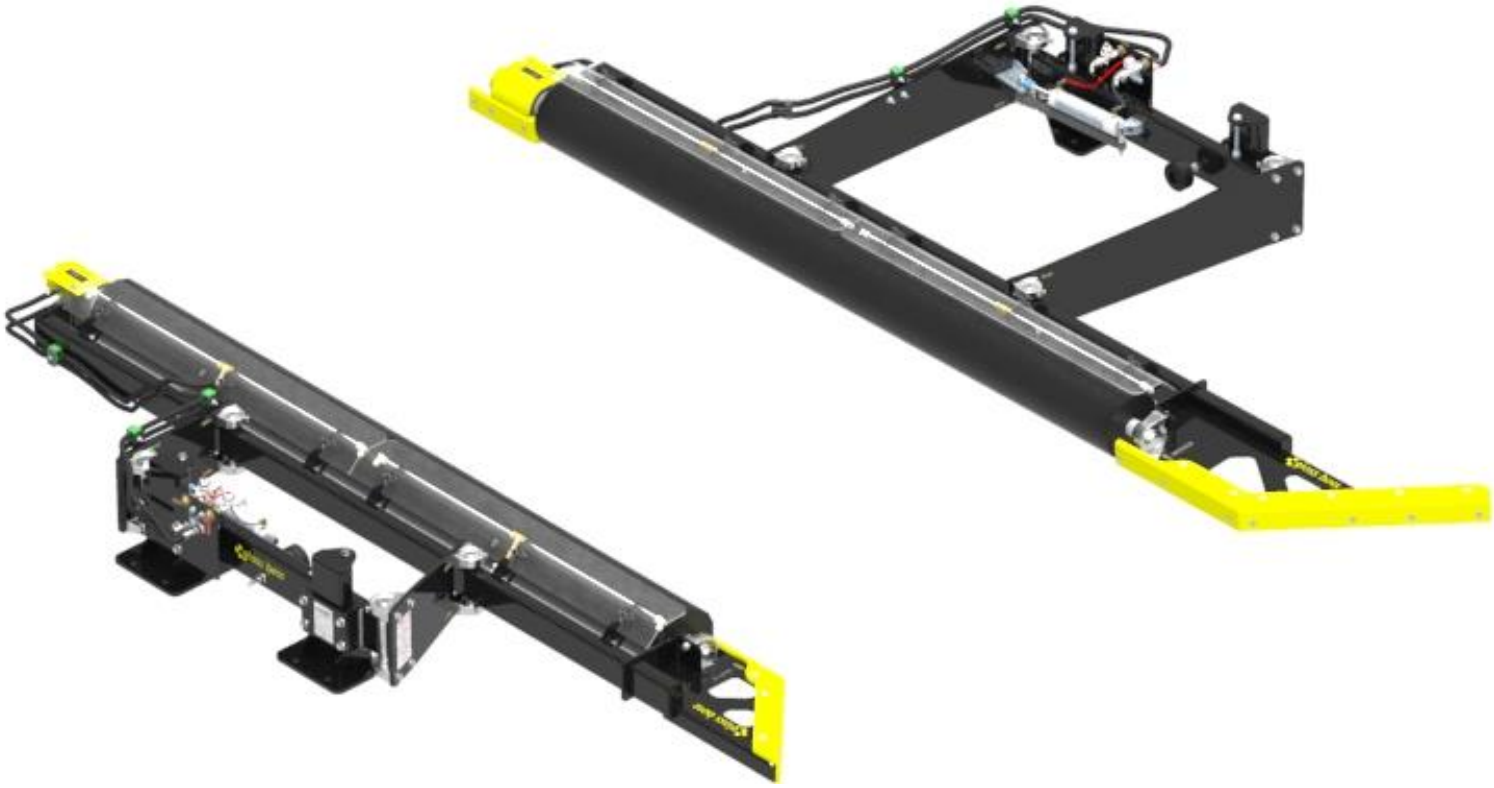

Toll Free: 800-361-7797
Phone: 705-722-7649 | Fax: 705-720-0582
Office Hours: Mon-Fri: 8:00am – 5:00pm EST

MacNeil Wash Systems Limited – Service Division
90 Welham Road
Barrie, ON L4N 8Y4

General Inquiries: info@macneilwash.com
Technical Support: techsupport@macneilwash.com

DRIVER SIDE

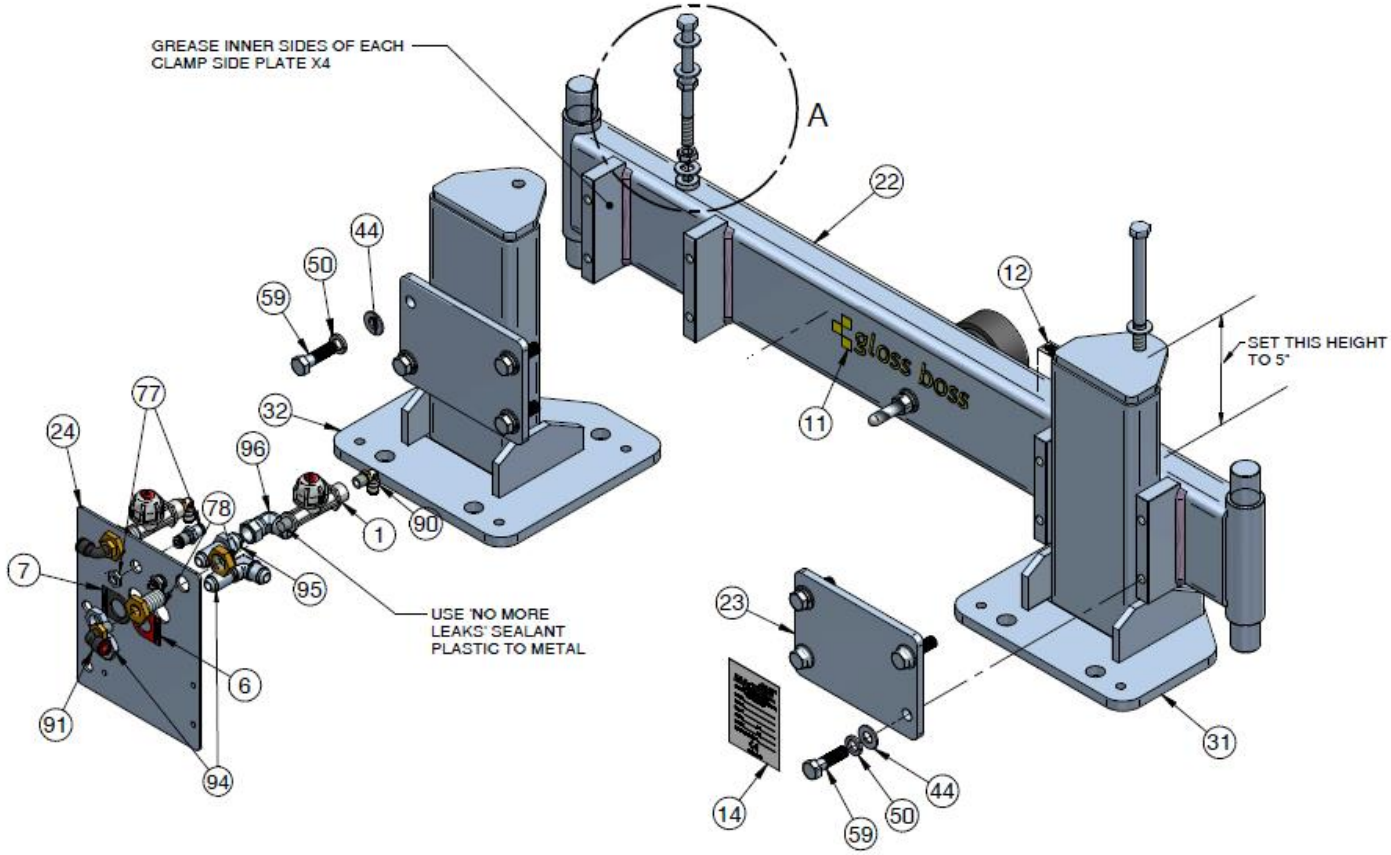
GREASE INNER SIDES OF EACH CLAMP SIDE PLATE X4
A
22
44
50
59
12
SET THIS HEIGHT TO 5"
gloss boss
11
77
24
32
96
78
1
90
7
95
USE 'NO MORE LEAKS' SEALANT PLASTIC TO METAL
6
91
94
23
31
14
59
50
44

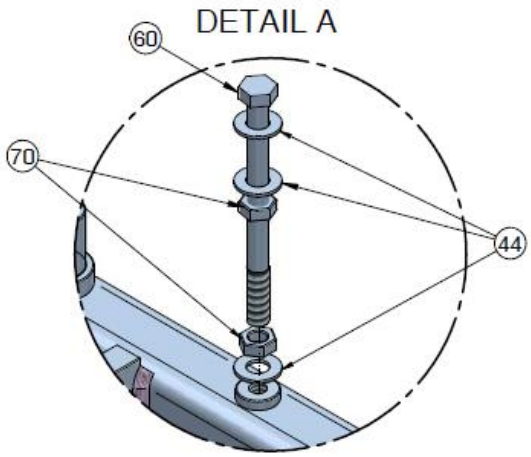
DETAIL A
60
70
44

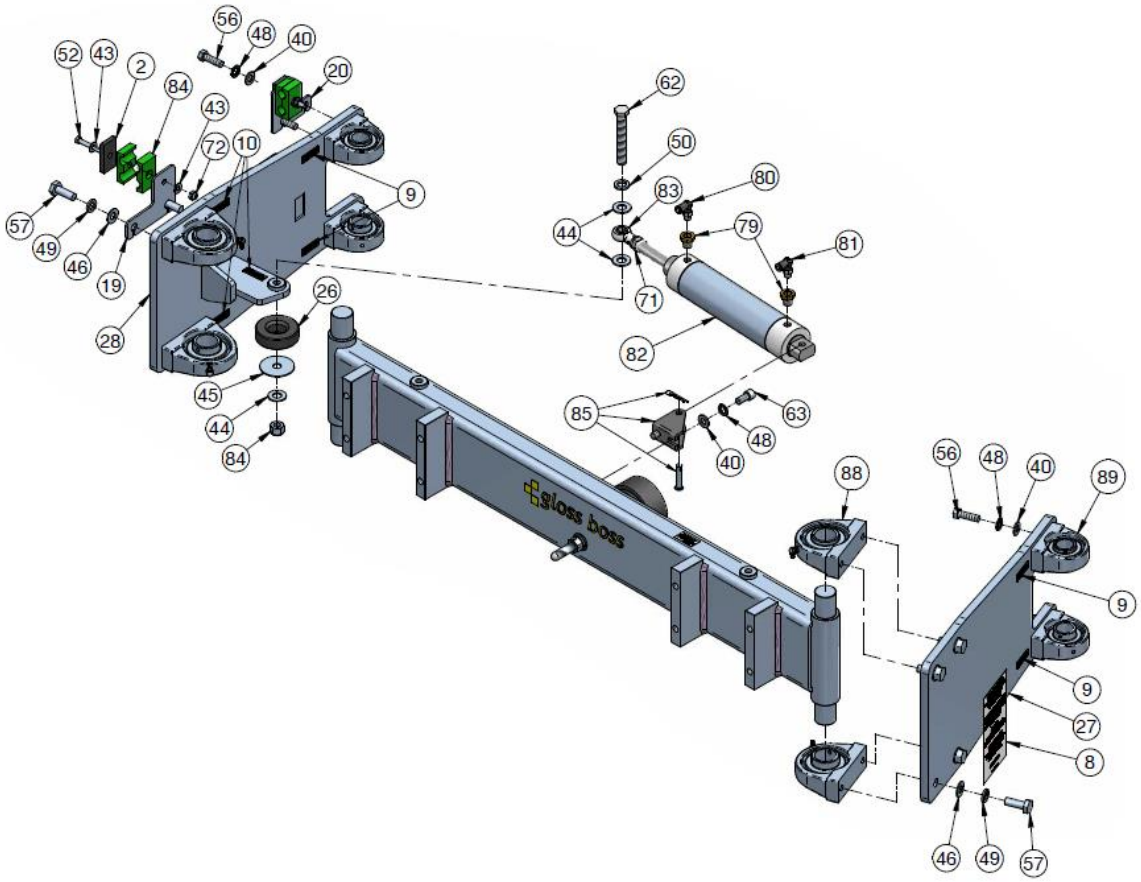
56
48
40
52
43
2
84
20
43
72
10
9
62
50
80
83
79
81
44
71
57
49
46
19
26
28
82
45
44
84
85
63
48
40
88
56
48
40
89
9
9
27
8
46
49
57
gloss boss

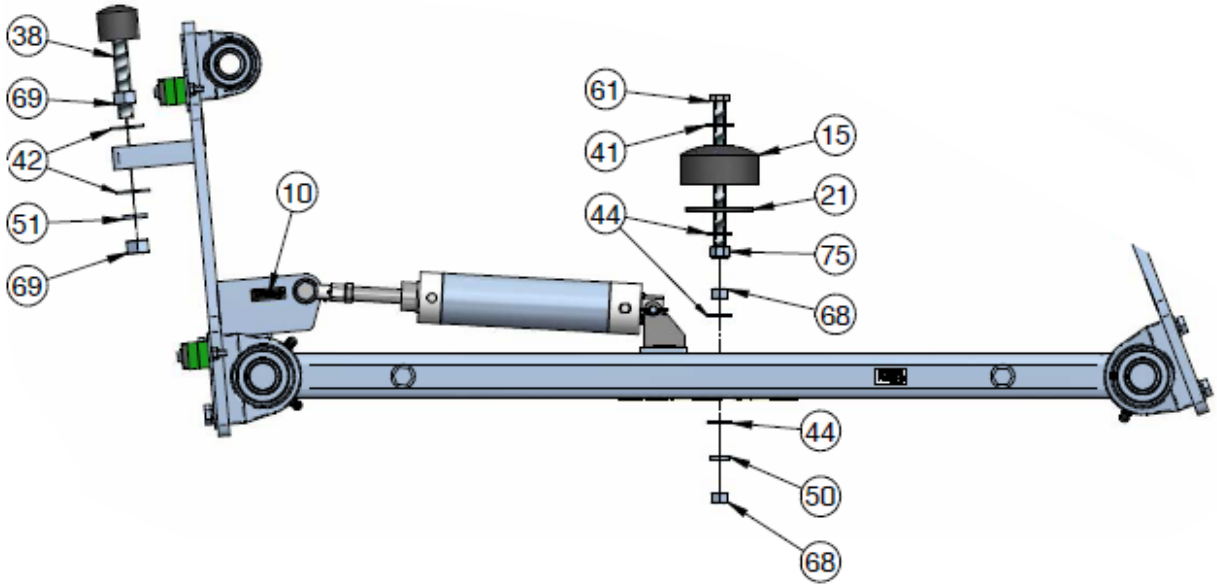
38
69
42
51
69
10
61
41
15
21
44
75
68
44
50
68

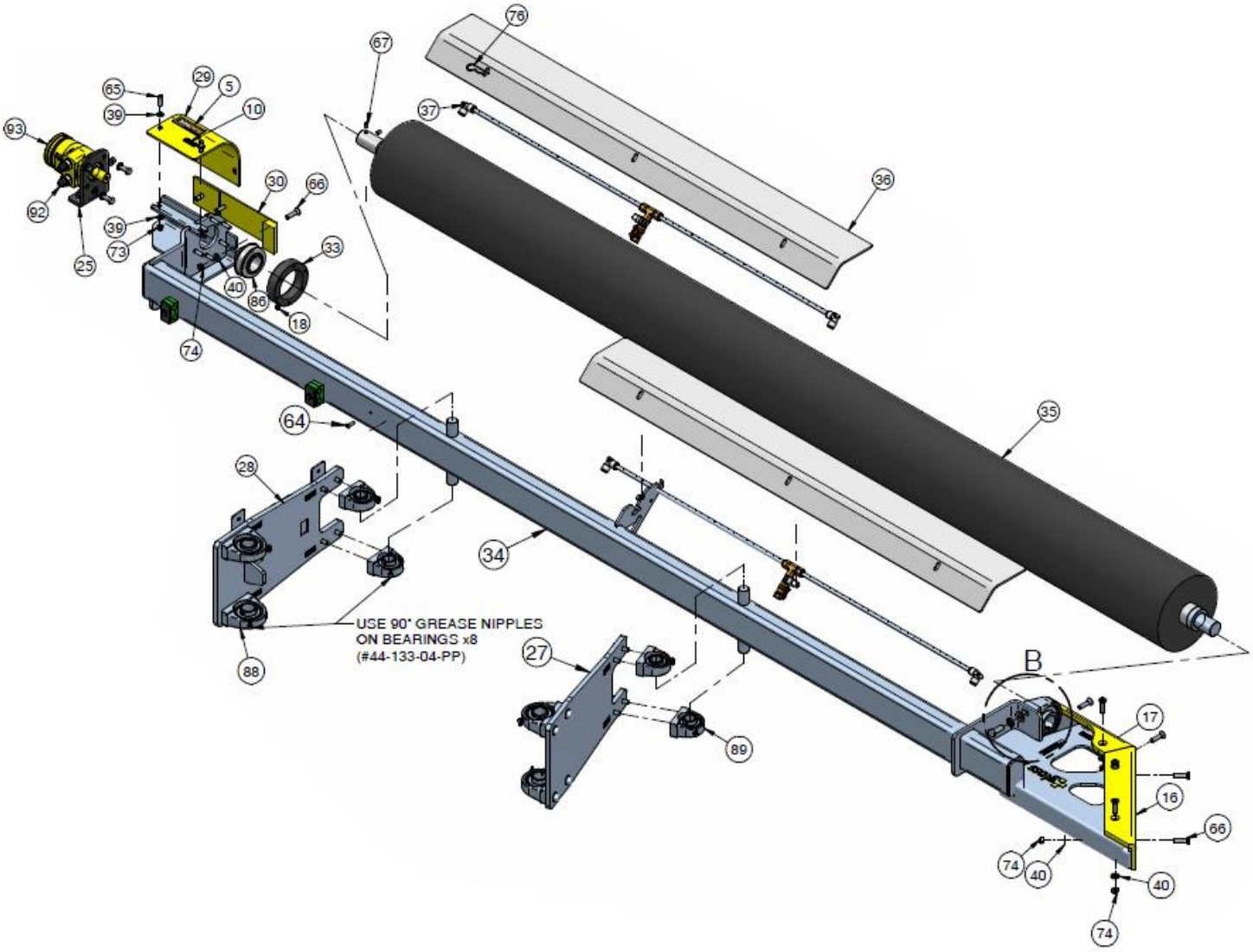

Toll Free: 800-361-7797
Phone: 705-722-7649 | Fax: 705-720-0582
Office Hours: Mon-Fri: 8:00am – 5:00pm EST

MacNeil Wash Systems Limited – Service Division
90 Welham Road
Barrie, ON L4N 8Y4

General Inquiries: info@macneilwash.com
Technical Support: techsupport@macneilwash.com

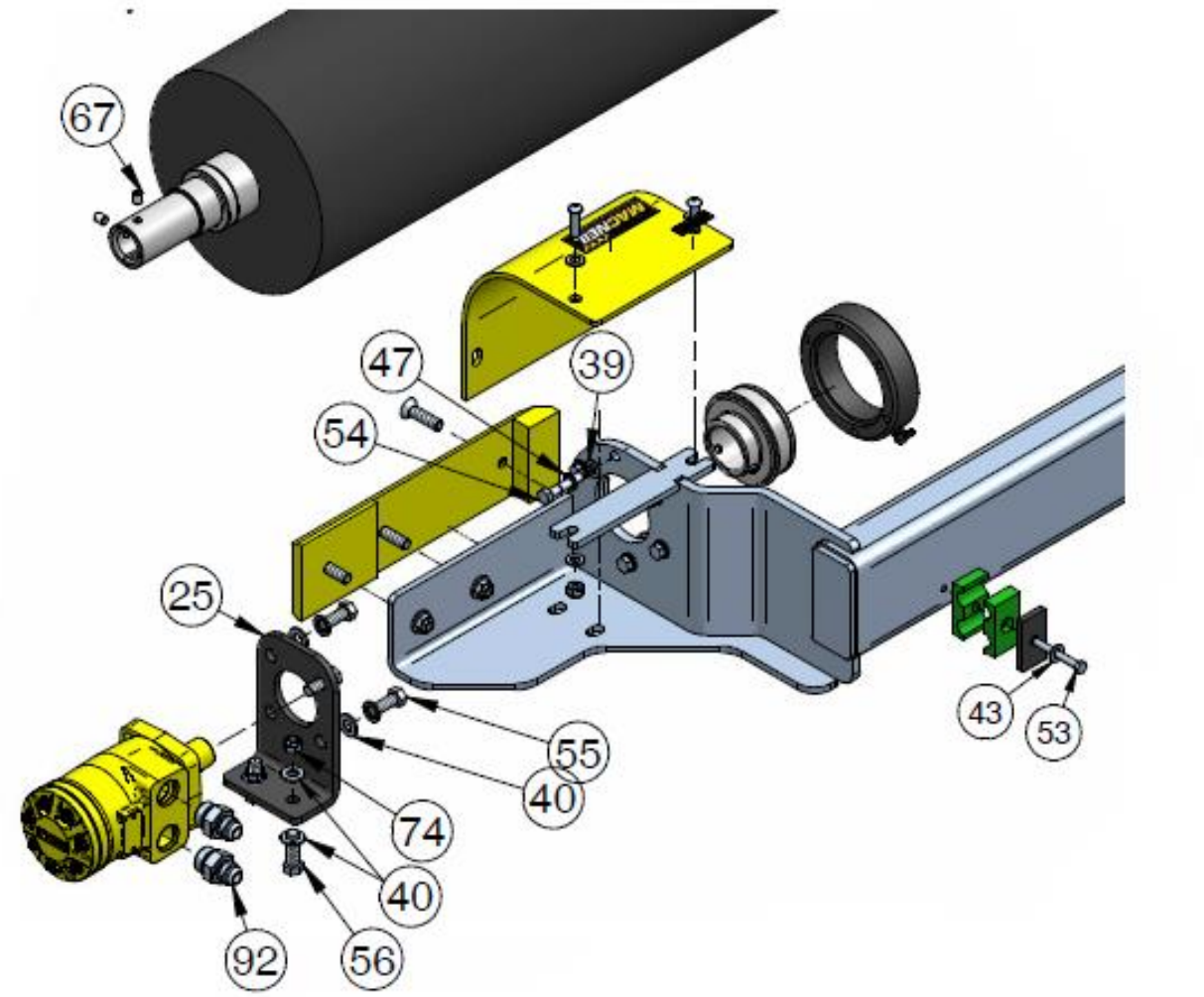
67
47
39
54
25
43
53
55
40
74
40
92
56

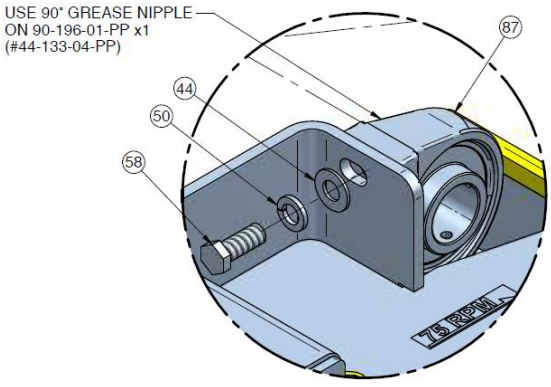
USE 90° GREASE NIPPLE
ON 90-196-01-PP x1
(#44-133-04-PP)
87
44
50
58
75 RPM

DETAIL B

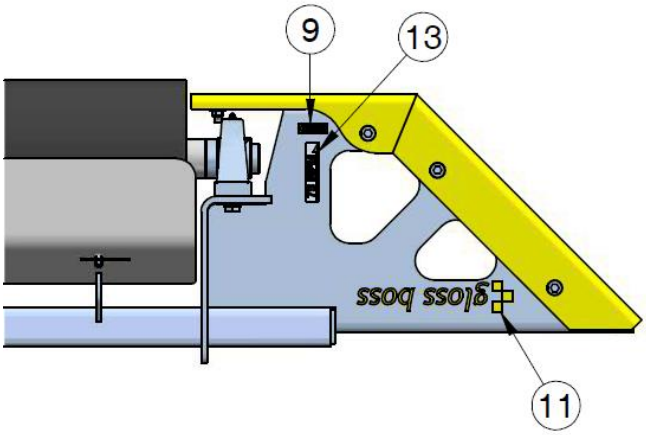
9
13
11

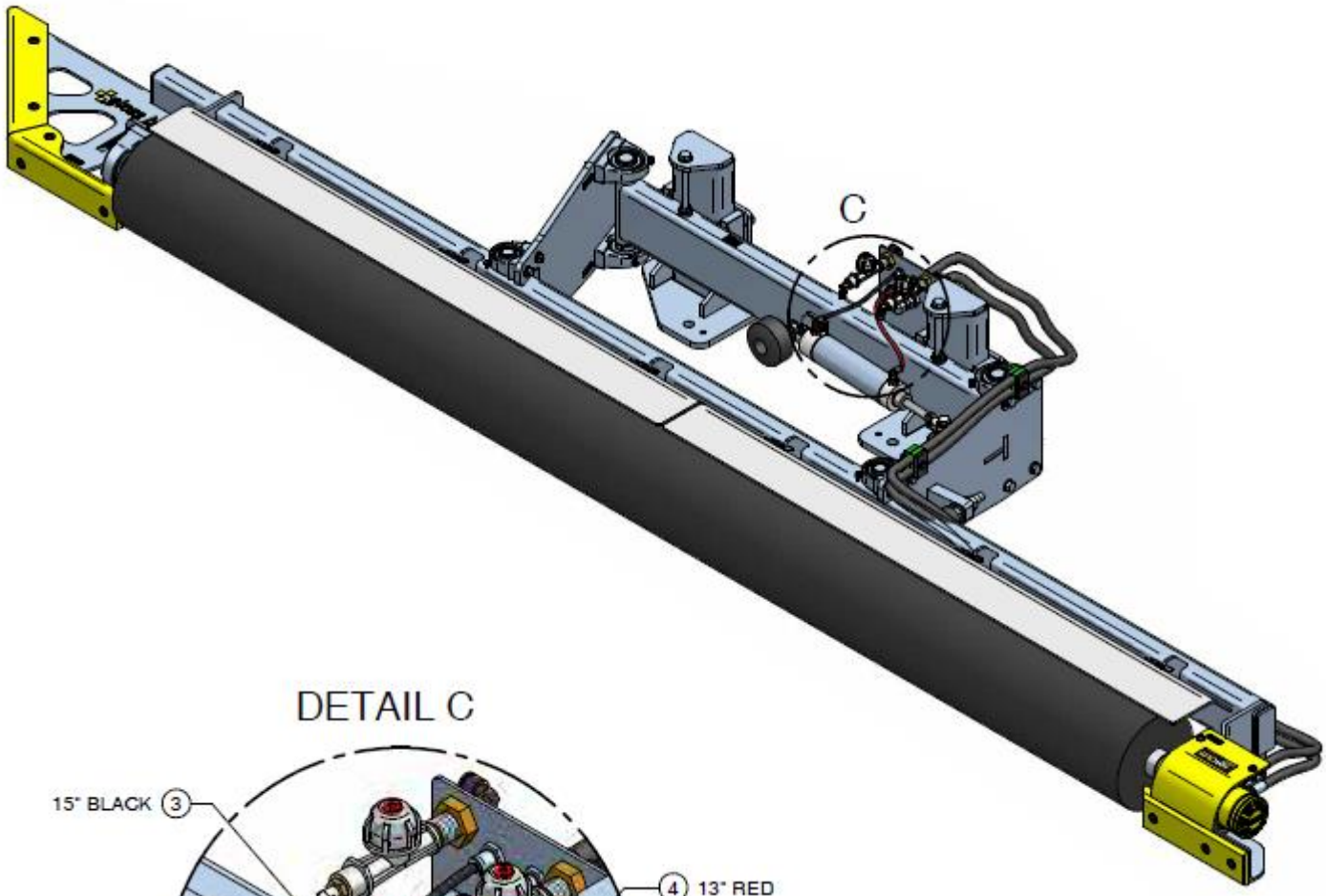

DETAIL C

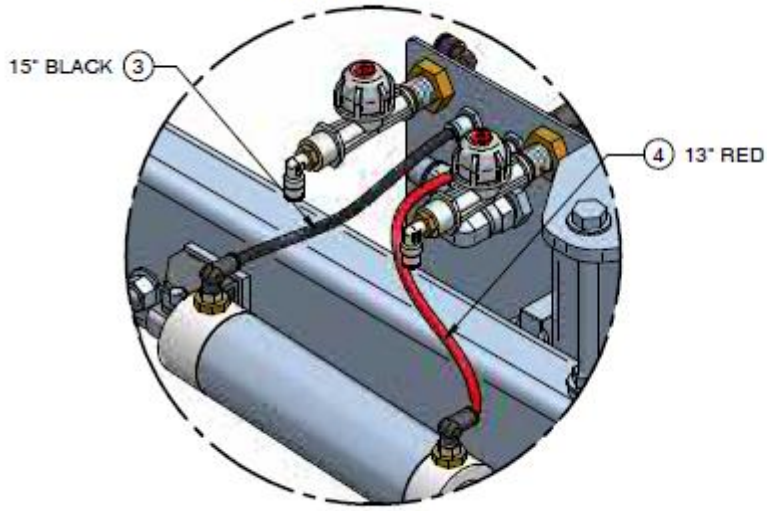

Toll Free: 800-361-7797
Phone: 705-722-7649 | Fax: 705-720-0582
Office Hours: Mon-Fri: 8:00am – 5:00pm EST

MacNeil Wash Systems Limited – Service Division
90 Welham Road
Barrie, ON L4N 8Y4

General Inquiries: info@macneilwash.com
Technical Support: techsupport@macneilwash.com

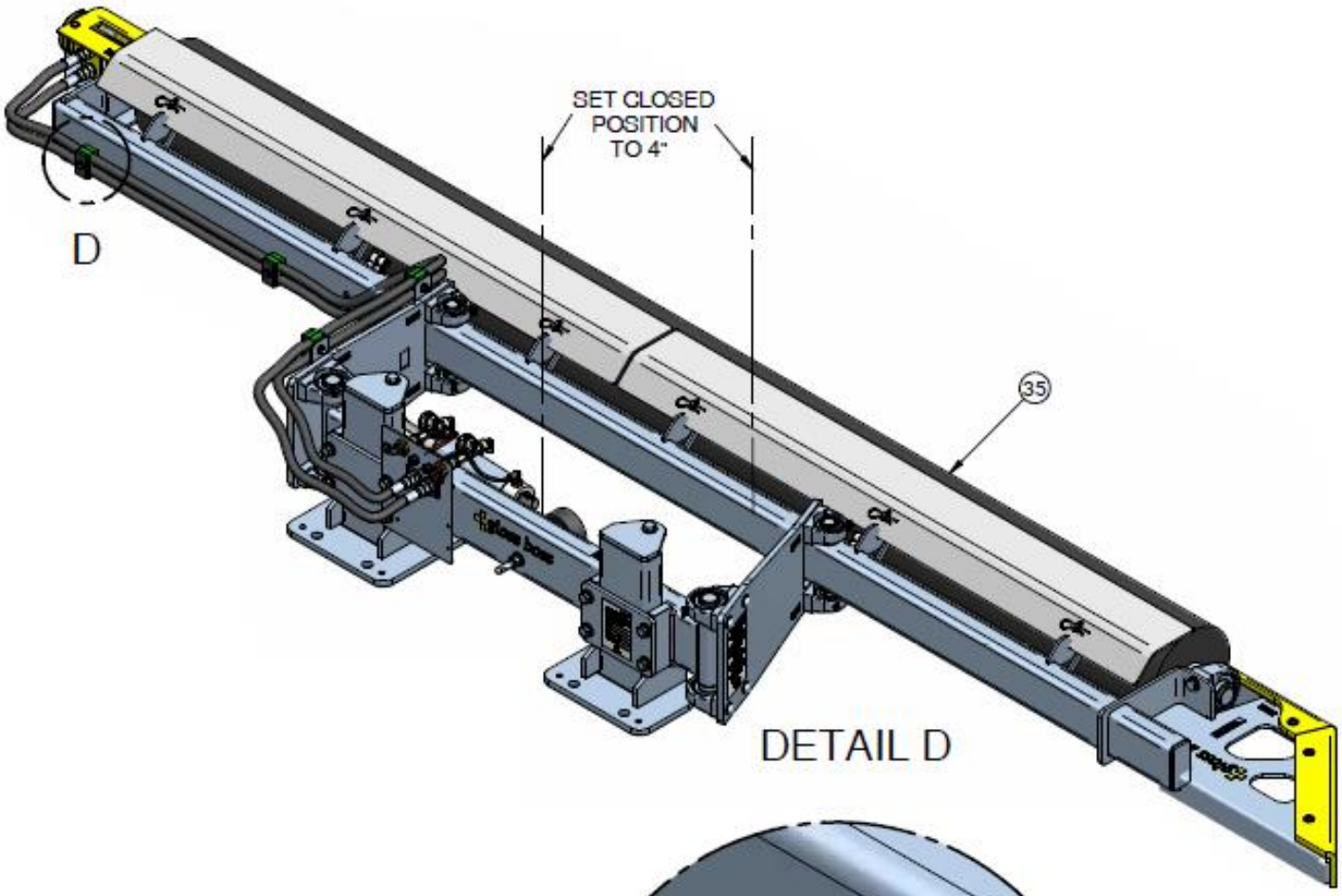

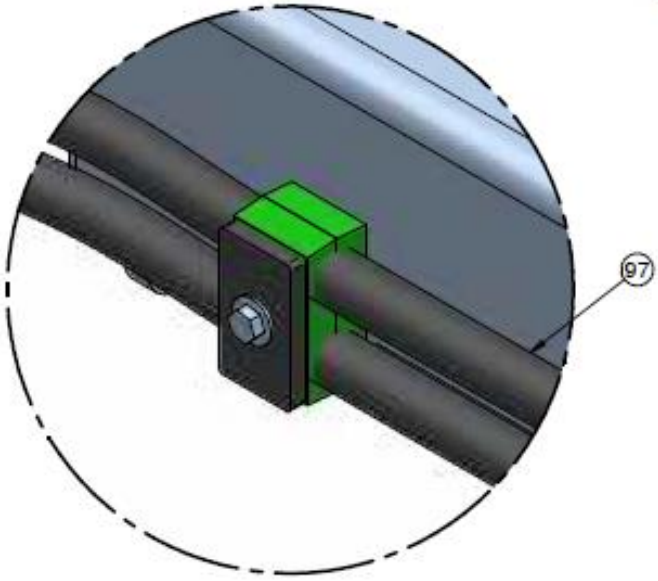

Toll Free: 800-361-7797
Phone: 705-722-7649 | Fax: 705-720-0582
Office Hours: Mon-Fri: 8:00am – 5:00pm EST

MacNeil Wash Systems Limited – Service Division
90 Welham Road
Barrie, ON L4N 8Y4

General Inquiries: info@macneilwash.com
Technical Support: techsupport@macneilwash.com

REF.	DESCRIPTION	PART NUMBER	QTY.
1	NOZL BODY THREADED 25 PSI CHECK	10-200-05-PP	2
2	PLATE - HOSE BLOCK - BLACK	15-120-00-BK	4
3	TUBE NY BLK 0.25"OD - 15"	33-361-20-4BK	1
4	TUBE NY RD 0.25"OD-13"	33-361-20-4RD	1
5	DECAL 'MACNEIL' LOGO 1-1/8" X 3-3/8"	36-000-01-PP	1
6	DECAL TAG HYD. FLOW 'PRESSURE' RED	36-010-00-PP	1
7	DECAL TAG HYD. FLOW 'RETURN' BLACK	36-011-00-PP	1
8	DECAL "POWDERCOAT WARNING" 6" x 3-1/2"	36-012-00-PP	1
9	DECAL 'GREASE WEEKLY' > RIGHT - YL / BLK	36-016-02-PP	7
10	DECAL 'GREASE WEEKLY' <LEFT - YL / BLK	36-016-03-PP	4
11	DECAL *NEW* GLOSSBOSS SHORT (8" x 1 5/8")	36-042-01-PP	2
12	DECAL 'PATENT PENDING' BLK ON WHITE	36-065-14-PP	1
13	DECAL 75 RPM -2 STICKERS (1-CCW, 2-CW)	36-076-00-PP	1
14	MACNEIL SERIAL ID TAG -NEW LOGO	36-900-00-PP	1
15	BUMPER POLY BLACK	40-370-00-PP	1
16	LEAD-IN GUARD FRONT DS (MK-1)	40-708-10-MP	1
17	LEAD-IN GUARD SIDE DS (MK-1)	40-708-11-MP	1
18	FTG GREASE 1/4"-28 90DEG	44-133-04-PP	10
19	CABLE MOUNT TAB LARGE	4B-100-02-BK	1
20	CABLE MOUNT TAB SMALL	4B-100-03-BK	1
21	BUMPER BACKING DISC	4B-100-04-BK	1
22	BASE WELDMENT	4B-100-20-BK	1
23	CLAMP PLATE	4B-100-21-BK	2
24	BULKHEAD BRACKET	4B-100-22-BK	1
25	HYD MOTOR RETAINING BRACKET	4B-100-23-BK	1
26	BUMPER WHEEL	4B-101-06-PP	1
27	ARM HIGH ENTRY SHORT	4B-102-03-BK	1
28	EXIT ARM WELDMENT LEFT HIGH	4B-103-00-BK	1
29	GEARBOX COVER	4B-103-06-PP	1
30	LEAD OUT SLIDER	4B-103-07-PP	1
31	D/S ENTRANCE POST	4B-104-30-BK	1
32	P/S ENTRANCE POST	4B-104-50-BK	1
33	BEARING HOUSING HYD BLACK	4B-650-05-BK	1

34	GB-LONG BRUSH CARRIER WELDMENT D/S PC BLACK	4G-501-00-BK	1
35	GB BRUSH - 9FT - HYDRAULICS	4G-602-10-PP	1
36	DRIP COVER	4G-603-00-PP	2
37	DRIP MANIFOLD ASSEMBLY	4G-604-00-MP	2
38	BUMPER STOP BLACK w/ 5/8-11x4" (BOLT)	53-111-00-PP	1
39	5/16" SS FLAT WASHER - SMALL OD	80-105-001-SI	10
40	WSHR SS FLT 3/8"	80-106-000-SI	27
41	WSHR SS FLAT 1/2"	80-108-000-SI	1
42	FLAT WASHER 5/8" SS	80-110-000-SI	2
43	WSHR SS FLAT SAE 1/4"	80-204-000-SI	6
44	WASHER FLAT 1/2" SS	80-208-000-SI	22
45	WSHR SS FLAT SAE 1/2" ID x 2" OD	80-208-001-SI	1
46	WSHR SS FLAT SAE 7/16" ID .077 THK .921 OD	80-307-000-SI	8
47	WSHR SS LOCK 5/16"	80-905-000-SI	6
48	LOCK WASHER 3/8" SS	80-906-000-SI	13
49	WSHR SS LOCK 7/16"	80-907-000-SI	8
50	LOCK WASHER SS 1/2"	80-908-000-SI	12
51	LOCK WASHER 5/8" SS	80-910-000-SI	1
52	HHCS SS 1/4"-20 x 2"	82-504-032-SIC	2
53	HHCS SS 1/4"-28 x 2"	82-504-032-SIF	2
54	HHCS SS 5/16"-18 X 1-1/2"	82-505-024-SIC	6
55	HHCS SS 3/8"-16 X 1"	82-506-016-SIC	3
56	HHCS SS 3/8"-16 X 1-1/4"	82-506-020-SIC	10
57	HHCS SS 7/16"-14 x 1-1/4"	82-507-020-SIC	8
58	HHCS SS 1/2"-13 X 1 1/4"	82-508-020-SIC	2
59	HHCS 1/2-13 x 1 3/4" S.S.	82-508-028-SIC	8
60	HHCS 1/2"-13 x 6" SS	82-508-096-SIC	2
61	HHCS SS 1/2"-13 x 7"	82-508-112-SIC	1
62	HHCS FL-THD SS 1/2"-13 x 3 1/2"	82-608-056-SIC	1
63	SHCS SS 3/8"-16 X 3/4"	82-706-012-SIC	2
64	SCREW SS BTN-HD 1/4"-28 X 3/4"	83-204-012-SIF	1
65	SCREW SS BTN-HD HEX 5/16"-18 X 1"	83-205-016-SIC	2
66	SCRW SS FLT-HD HEX. 3/8"-16 x 1-1/2"	83-606-024-SIC	10
67	SCRW SS SET 5/16"-24 x 3/8"	83-705-006-SIF	2

68	NUT SS 1/2"-13	84-008-000-SIC	2
69	NUT SS 5/8"-11	84-010-000-SIC	2
70	NUT SS JAM 1/2"-13	84-108-000-SIC	4
71	NUT SS JAM 1/2"-20	84-108-000-SIF	1
72	NUT SS NYLOCK 1/4"-20	85-004-000-SIC	2
73	NYLOCK NUT 5-/16" -18	85-005-000-SIC	2
74	NUT SS NYLOCK 3/8"-16	85-006-000-SIC	12
75	NUT SS NYLOCK 1/2"-13	85-008-000-SIC	2
76	COTTER PIN SS 3/8" x 2-5/16"	86-004-010-SI	6
77	FTG AIR BULKHEAD UNION 1/4"TBE X 1/4"TBE	90-005-01-PP	2
78	FTG BULKHEAD TERMINAL BOLT	90-007-00-PP	2
79	BUSHING REDUCER 1/4" MNPT-1/8" FNPT BR 110-BA	90-030-00-PP	2
80	RESTRICTOR FTG 90° 1/4TUBE 0.4mm ORIFICE	90-071-14-PP	1
81	RESTRICTOR FTG 90° 1/4TUBE 1.4mm ORIFICE	90-071-21-PP	1
82	CYL AIR 2" DIA X 6" STROKE 2000D02-06A	90-100-01-PP	1
83	ROD END SS-PHSB8 1/2"F-20 c/wGR NPL10-32	90-151-02-PP	1
84	HOSE BLOCK 5/8"DBL CUSHION PAIR GREEN	90-152-01-PP	4
85	PIVOT BRKT SS c/w PIN & CLIP BP-19CSS	90-174-00-PP	1
86	ER-25 BEARING ASSEMBLY-SEALMASTER	90-192-01-PP	1
87	TAPPED BASE BEARING SUC208-24	90-196-01-PP	1
88	TAPPED BASE BEARING SUC206-20	90-196-02-PP	4
89	TAPPED BASE BEARING SUC205-16	90-196-03-PP	4
90	FTG ELB SWV 1/4"TBE-1/4"MPT	90-223-06-PP	2
91	ELBOW SWV 1/4"NPT X 3/8" TBE SMC	90-225-07-PP	2
92	FTG HYD 5/8"MORB X 1/2"MJIC	95-030-07-PP	2
93	MOTOR HYD (#101-1010-009) YELLOW	95-100-01-YL	1
94	HYDRAULIC BULKHEAD 90° FTG - 2043-8-8S	95-310-03-PP	1
95	FTG HYD BULKHEAD 2041-8-8S	95-311-10-PP	1
96	HYD. FTG ELBOW 2071-8-8S	95-316-08-PP	1
97	HYD HOSE ASS'Y 3/8"X96" (WB/GB HYD D/S)	95-651-00-PP	2

PASSENGER SIDE

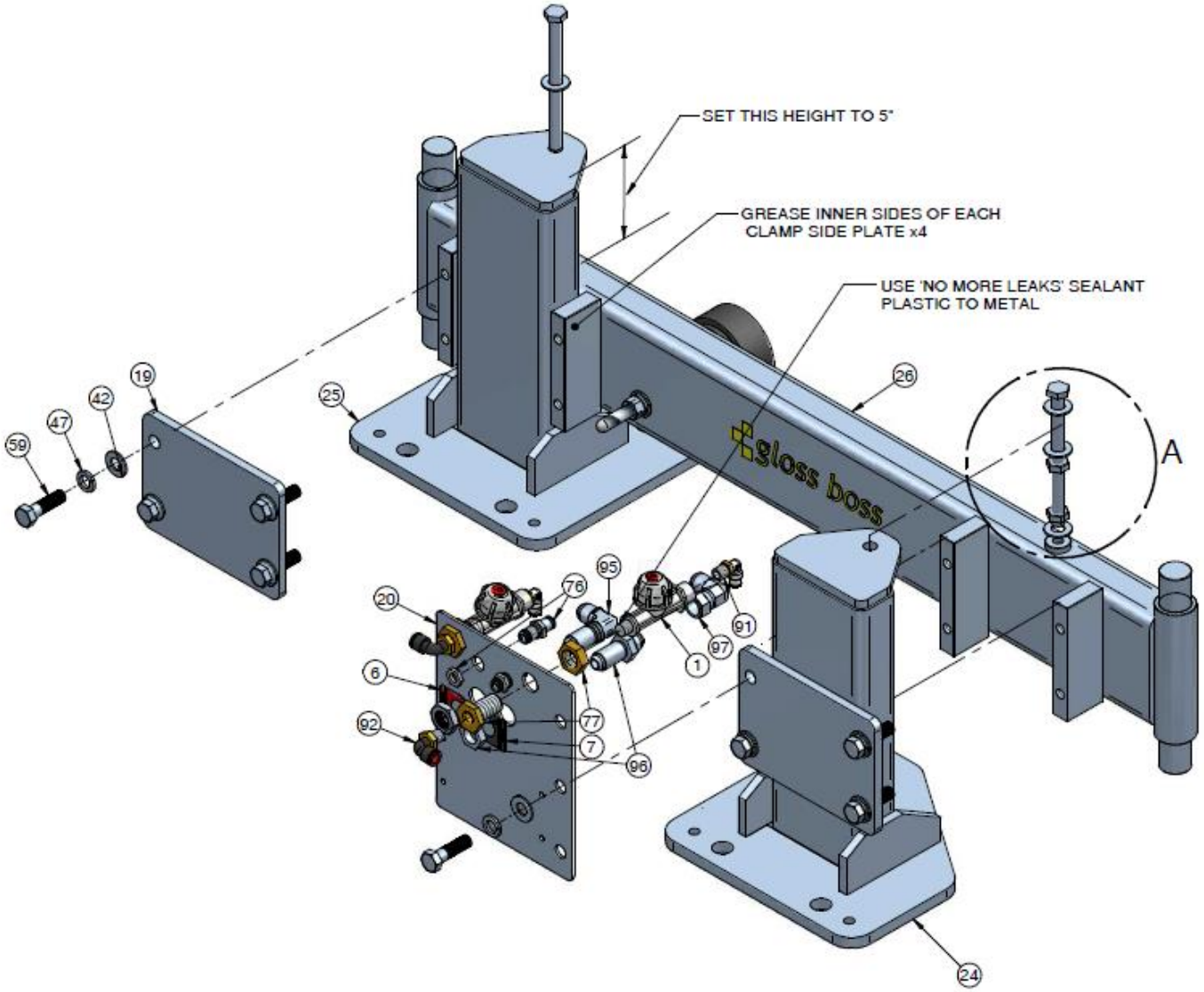

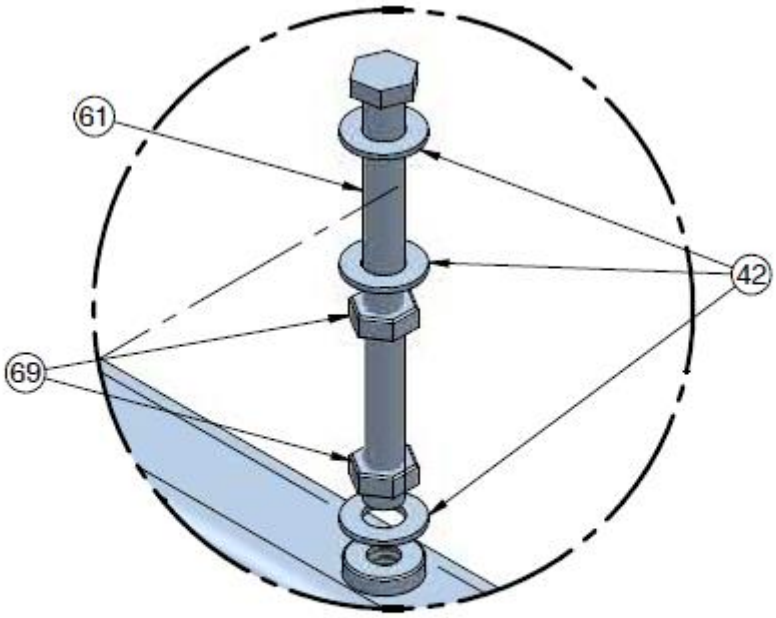

DETAIL A

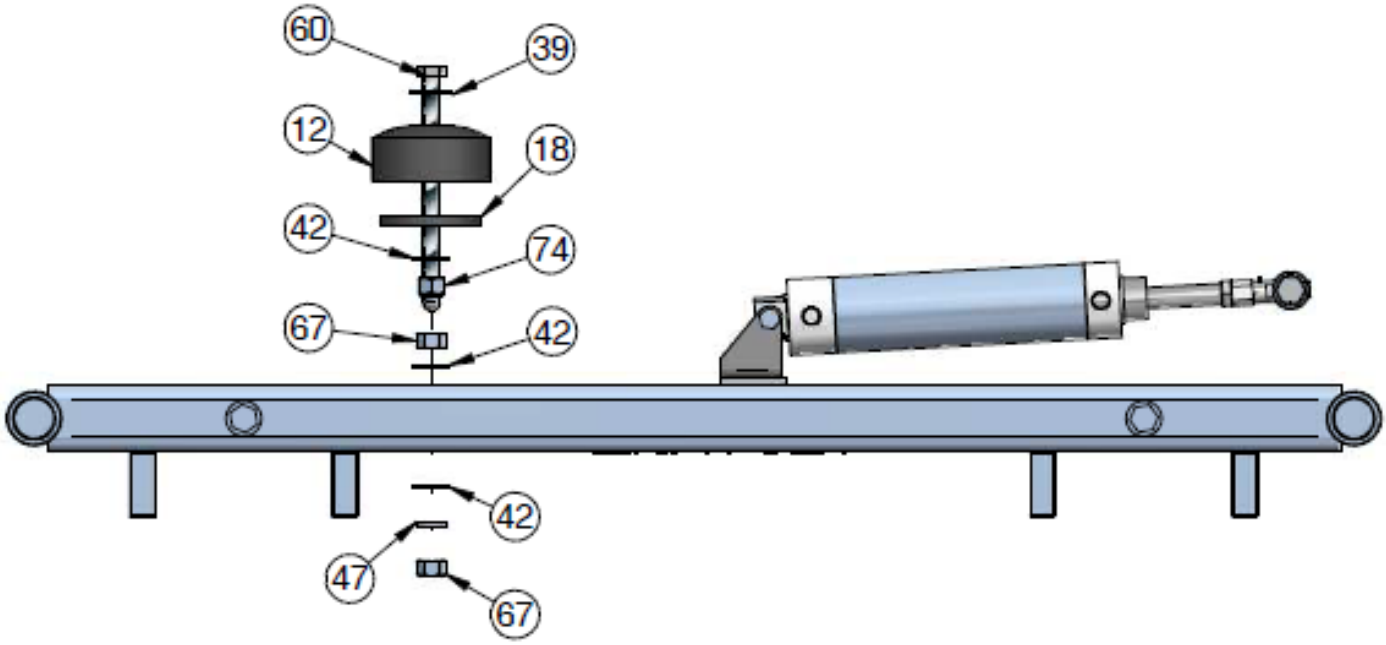

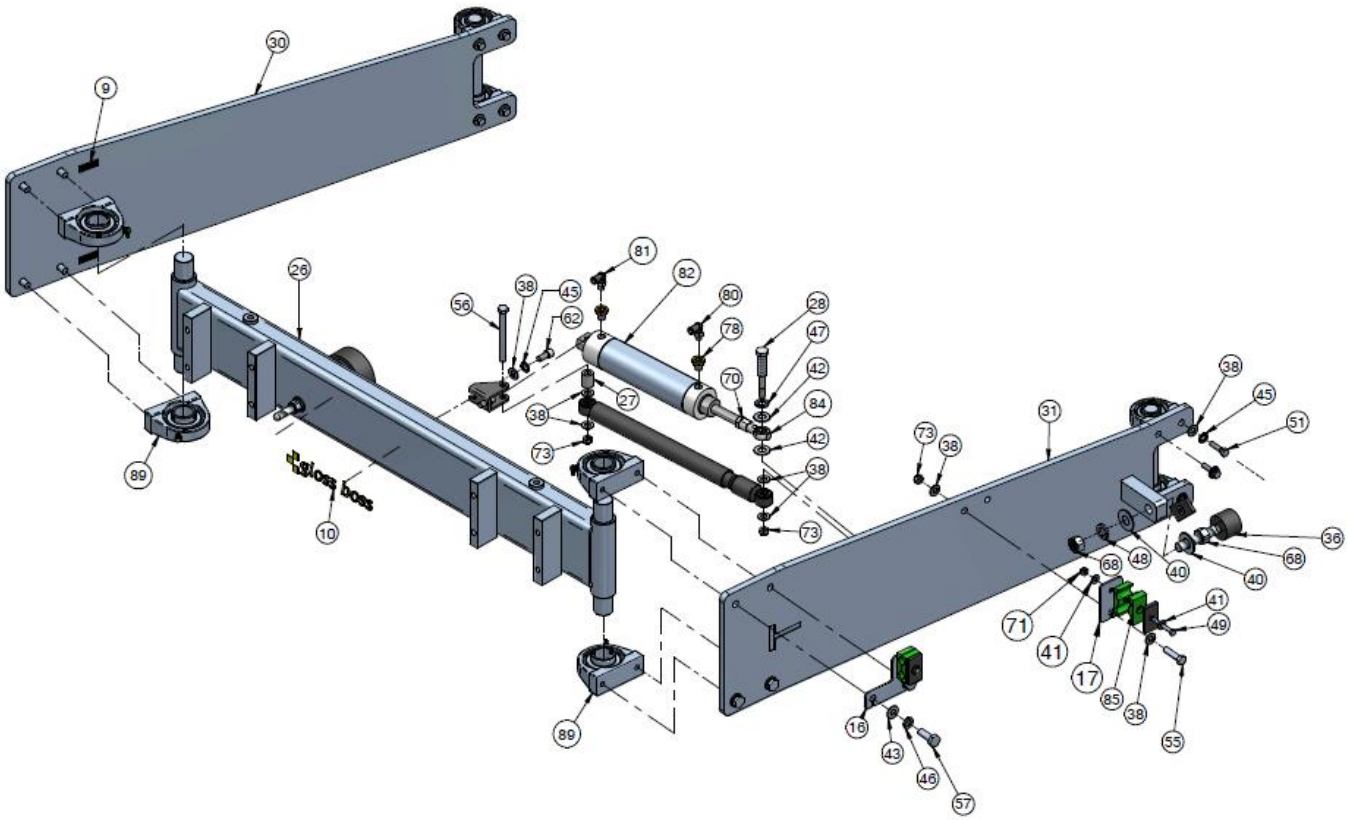

180deg. VIEW

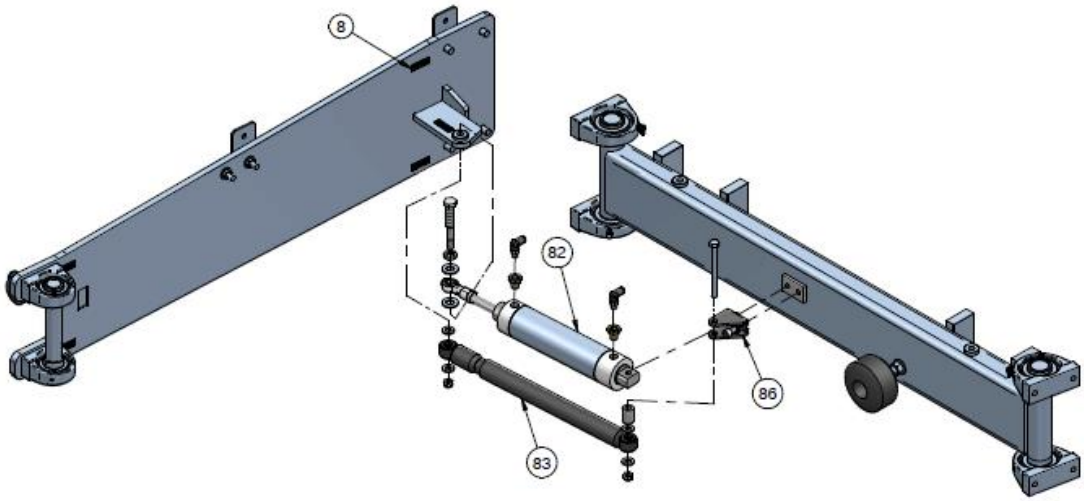

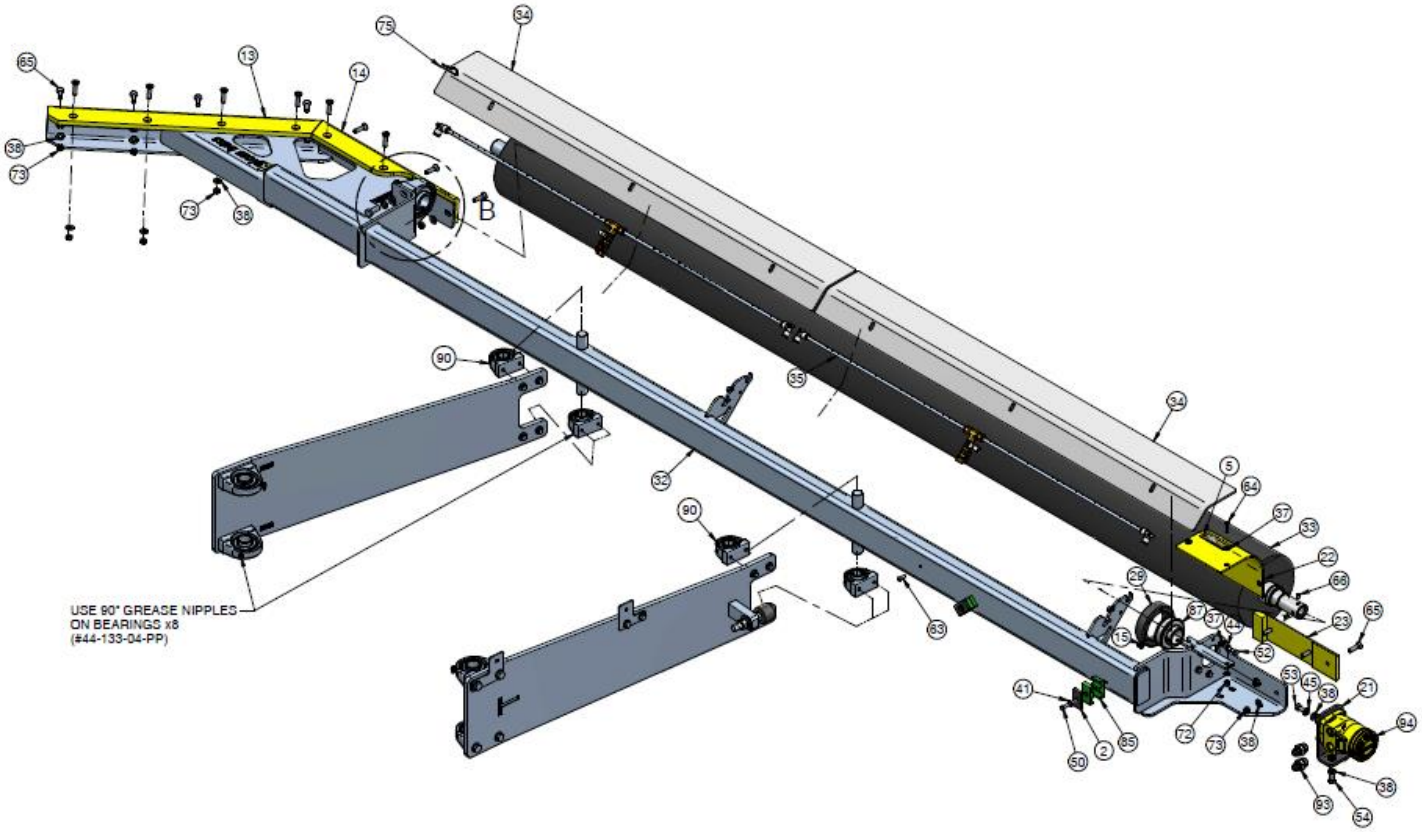
USE 90° GREASE NIPPLES
ON BEARINGS x8
(#44-133-04-PP)
B

DETAIL B

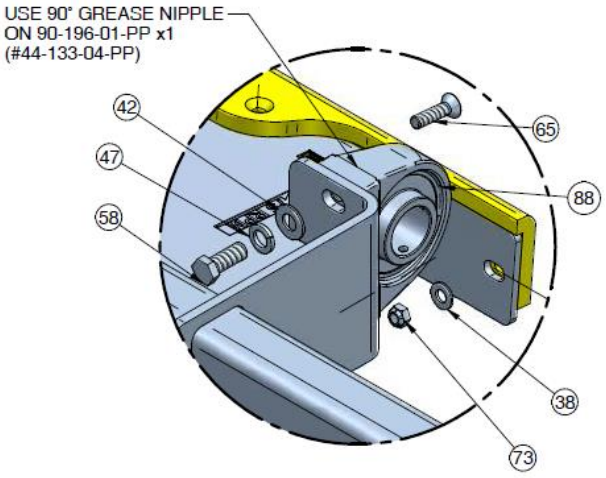
USE 90° GREASE NIPPLE
ON 90-196-01-PP x1
(#44-133-04-PP)

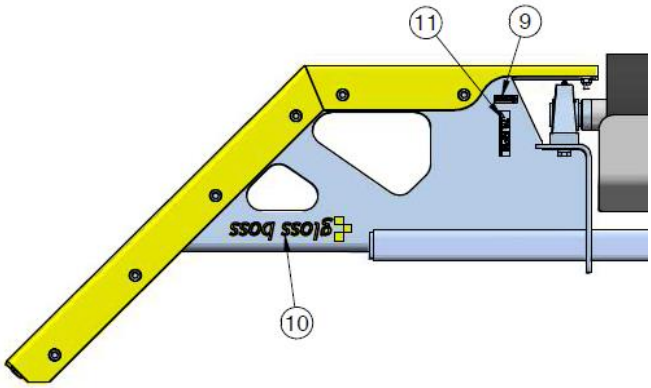
gloss boss

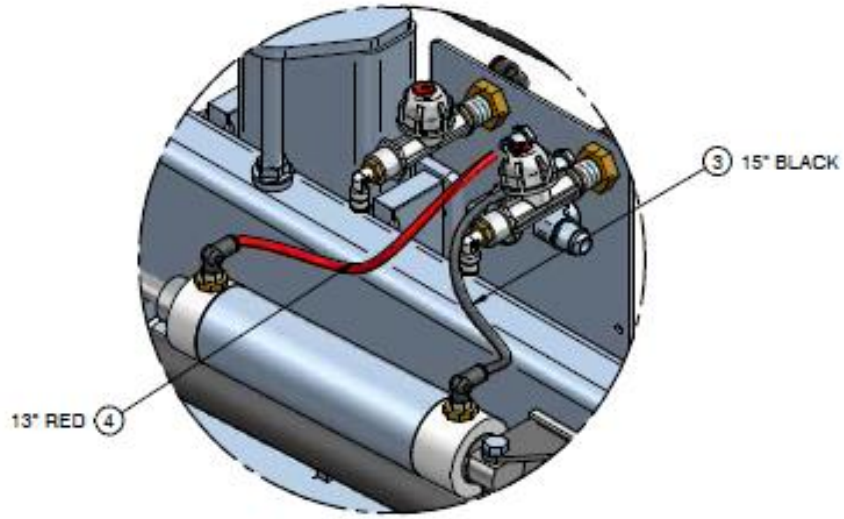

DETAIL C

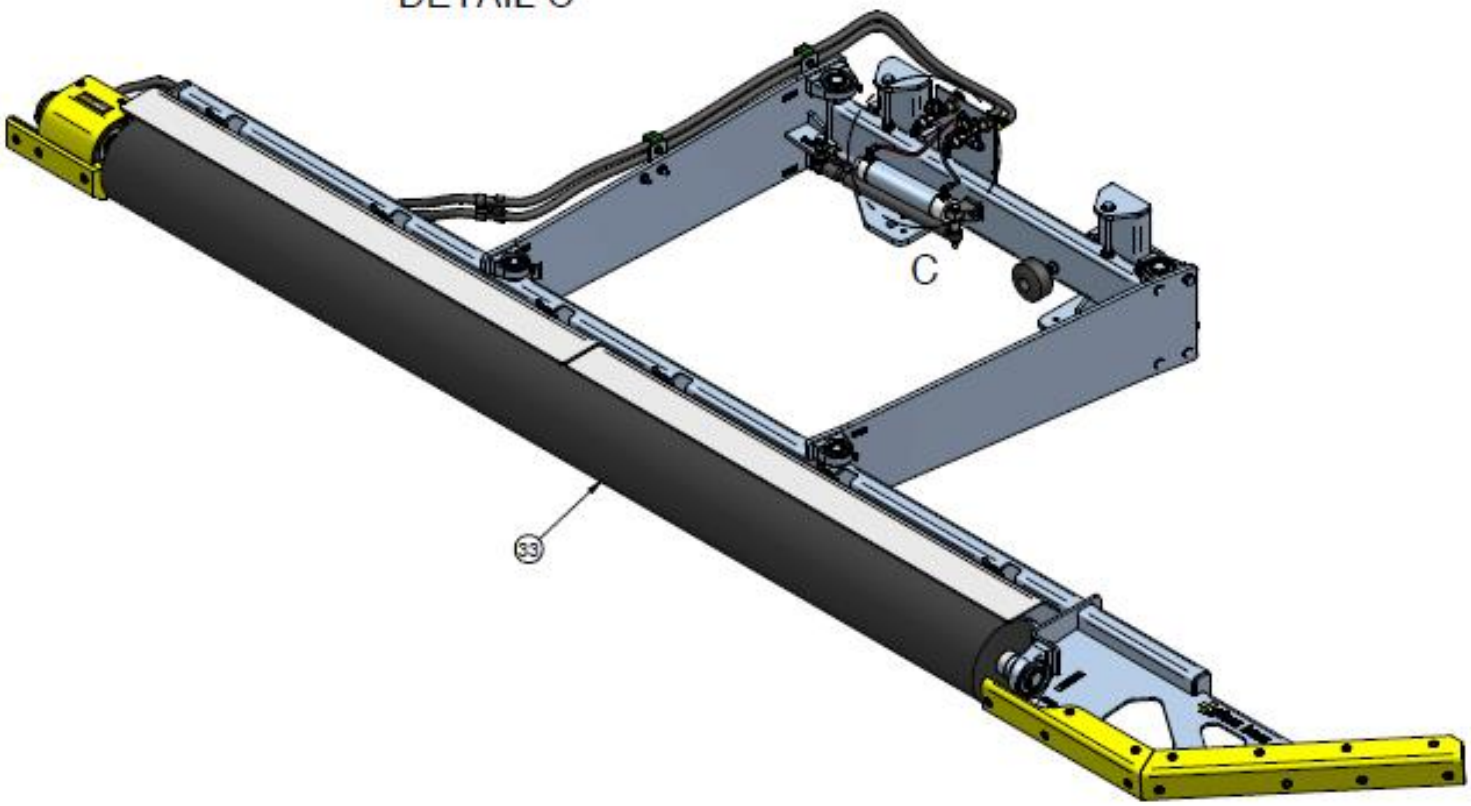

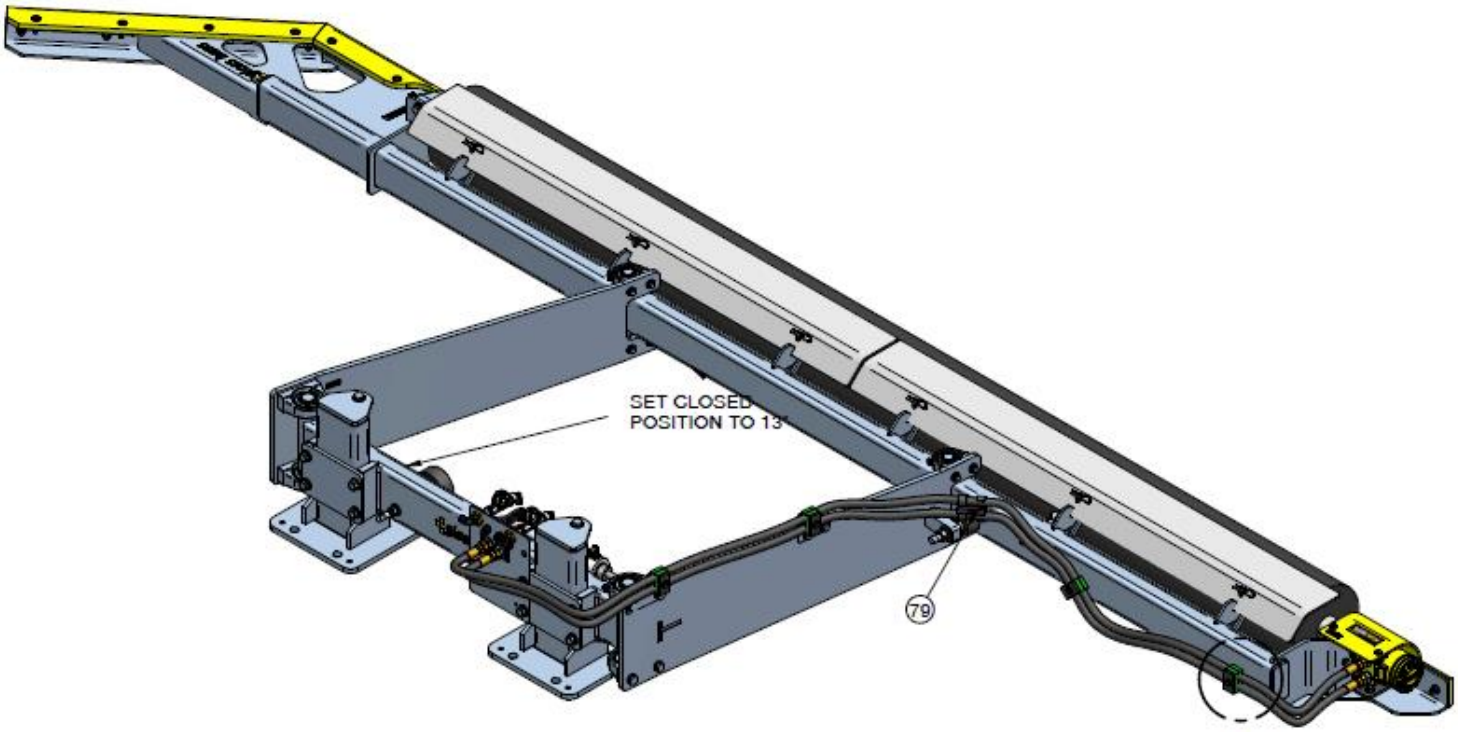

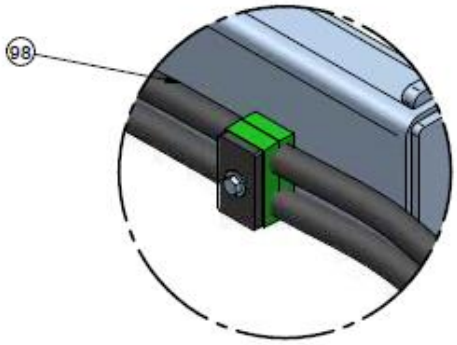

DETAIL D

REF.	DESCRIPTION	PART NUMBER	QTY.
1	NOZL BODY THREADED 25 PSI CHECK	10-200-05-PP	2
2	PLATE - HOSE BLOCK - BLACK	15-120-00-BK	4
3	TUBE NY BLACK 0.25" OD -- 15"	33-361-20-4BK	1
4	TUBE NY RED 0.25" OD -- 13"	33-361-20-4RD	1
5	DECAL 'MACNEIL' LOGO 1-1/8" X 3-3/8"	36-000-01-PP	1
6	DECAL TAG HYD. FLOW 'PRESSURE' RED	36-010-00-PP	1
7	DECAL TAG HYD. FLOW 'RETURN' BLACK	36-011-00-PP	1
8	DECAL 'GREASE WEEKLY' > RIGHT - YL / BLK	36-016-02-PP	4
9	DECAL 'GREASE WEEKLY' <LEFT - YL / BLK	36-016-03-PP	7
10	DECAL *NEW* GLOSSBOSS SHORT (8" x 1 5/8")	36-042-01-PP	2
11	DECAL 75 RPM -2 STICKERS (1-ARROW CCW, 2-ARROW CW)	36-076-00-PP	1
12	BUMPER POLY BLACK	40-370-00-PP	1
13	LEAD-IN GUARD FRONT PS (MK-1)	40-708-00-MP	1
14	LEAD-IN GUARD SIDE PS (MK-1)	40-708-01-MP	1
15	FTG GREASE 1/4"-28 90DEG	44-133-04-PP	10
16	CABLE MOUNT TAB LARGE	4B-100-02-BK	1
17	CABLE MOUNT TAB SMALL	4B-100-03-BK	1
18	BUMPER BACKING DISC	4B-100-04-BK	1
19	CLAMP PLATE	4B-100-21-BK	2
20	BULKHEAD BRACKET	4B-100-22-BK	1
21	HYD MOTOR RETAINING BRACKET	4B-100-23-BK	1
22	GEARBOX COVER	4B-103-06-PP	1
23	LEAD OUT SLIDER	4B-103-07-PP	1
24	D/S ENTRANCE POST	4B-104-30-BK	1
25	P/S ENTRANCE POST	4B-104-50-BK	1
26	BASE WELDMENT RIGHT	4B-200-20-BK	1
27	SPACER FOR WHEEL BOSS ARM SHOCK	4B-202-04-MP	1
28	CUSTOM CYL SHOCK MOUNT BOLT	4B-202-05-PP	1
29	BEARING HOUSING HYD BLACK	4B-650-05-BK	1
30	ARM LOW ENTRY LONG	4G-202-03-BK	1
31	EXIT ARM WELDMENT RIGHT LOW	4G-203-00-BK	1
32	GB LONG -BRUSH CARRIER WELDMENT P/S - PC BLACK	4G-601-00-BK	1
33	GB BRUSH - 9FT - HYDRAULICS	4G-602-10-PP	1

34	DRIP COVER	4G-603-00-PP	2
35	DRIP MANIFOLD ASSEMBLY	4G-604-00-MP	2
36	BUMPER STOP BLACK w/ 5/8-11x4" (BOLT)	53-111-00-PP	1
37	5/16" SS FLAT WASHER - SMALL OD	80-105-001-SI	10
38	WSHR SS FLT 3/8"	80-106-000-SI	41
39	WSHR SS FLAT 1/2"	80-108-000-SI	1
40	FLAT WASHER 5/8" SS	80-110-000-SI	2
41	WSHR SS FLAT SAE 1/4"	80-204-000-SI	6
42	WASHER FLAT 1/2" SS	80-208-000-SI	21
43	WSHR SS FLAT SAE 7/16" ID .077 THK .921 OD	80-307-000-SI	8
44	WSHR SS LOCK 5/16"	80-905-000-SI	6
45	LOCK WASHER 3/8" SS	80-906-000-SI	13
46	WSHR SS LOCK 7/16"	80-907-000-SI	8
47	LOCK WASHER SS 1/2"	80-908-000-SI	12
48	LOCK WASHER 5/8" SS	80-910-000-SI	1
49	HHCS SS 1/4"-20 x 2"	82-504-032-SIC	2
50	HHCS SS 1/4"-28 x 2"	82-504-032-SIF	2
51	HHCS SS 5/16"-18 X 1-1/4"	82-505-020-SIC	8
52	HHCS SS 5/16"-18 X 1-1/2"	82-505-024-SIC	6
53	HHCS SS 3/8"-16 X 1"	82-506-016-SIC	3
54	HHCS SS 3/8"-16 X 1-1/4"	82-506-020-SIC	2
55	HHCS SS 3/8"-16 X 1-1/2"	82-506-024-SIC	2
56	HHCS SS 3/8"-16 x 4"	82-506-064-SIC	1
57	HHCS SS 7/16"-14 x 1-1/4"	82-507-020-SIC	8
58	HHCS SS 1/2"-13 X 1 1/4"	82-508-020-SIC	2
59	HHCS 1/2-13 x 1 3/4" S.S.	82-508-028-SIC	8
60	HHCS SS 1/2"-13 x 7"	82-508-112-SIC	1
61	HHCS FL-THD SS 1/2"-13 x 6"	82-608-096-SIC	2
62	SHCS SS 3/8"-16 X 3/4"	82-706-012-SIC	2
63	SCREW SS BTN-HD 1/4"-28 X 3/4"	83-204-012-SIF	1
64	SCREW SS BTN-HD HEX 5/16"-18 X 1"	83-205-016-SIC	2
65	SCRW SS FLT-HD HEX. 3/8"-16 x 1-1/2"	83-606-024-SIC	16
66	SCRW SS SET 5/16"-24 x 3/8"	83-705-006-SIF	2
67	NUT SS 1/2"-13	84-008-000-SIC	2

68	NUT SS 5/8"-11	84-010-000-SIC	2
69	NUT SS JAM 1/2"-13	84-108-000-SIC	4
70	NUT SS JAM 1/2"-20	84-108-000-SIF	1
71	NUT SS NYLOCK 1/4"-20	85-004-000-SIC	2
72	NYLOCK NUT 5-/16" -18	85-005-000-SIC	2
73	NUT SS NYLOCK 3/8"-16	85-006-000-SIC	22
74	NUT SS NYLOCK 1/2"-13	85-008-000-SIC	1
75	COTTER PIN SS 3/8" x 2-5/16"	86-004-010-SI	6
76	FTG AIR BULKHEAD UNION 1/4"TBE X 1/4"TBE	90-005-01-PP	2
77	FTG BULKHEAD TERMINAL BOLT	90-007-00-PP	2
78	BUSHING REDUCER 1/4"MPT-1/8"FPT BR 110-BA	90-030-00-PP	2
79	POLY T-CLIP # 22	90-068-06-PP	1
80	RESTRICTOR FTG 90° 1/4TUBE 0.4mm ORIFICE	90-071-14-PP	1
81	RESTRICTOR FTG 90° 1/4TUBE 1.4mm ORIFICE	90-071-21-PP	1
82	CYL AIR 2" DIA X 6" STROKE 2000D02-06A	90-100-01-PP	1
83	SHOCK ABSORBER - BOGE 22-794-9	90-100-50-PP	1
84	ROD END SS-PHSB8 1/2"F-20 c/wGR NPL10-32	90-151-02-PP	1
85	HOSE BLOCK 5/8"DBL CUSHION PAIR GREEN	90-152-01-PP	4
86	PIVOT BRACKET SS (NO PIN & CLIP)	90-174-00-PP	1
87	ER-25 BEARING ASSEMBLY-SEALMASTER	90-192-01-PP	1
88	TAPPED BASE BEARING SUC208-24	90-196-01-PP	1
89	TAPPED BASE BEARING SUC206-20	90-196-02-PP	4
90	TAPPED BASE BEARING SUC205-16	90-196-03-PP	4
91	FTG ELB SWV 1/4"TBE-1/4"MPT	90-223-06-PP	2
92	ELBOW SWV 1/4"NPT X 3/8" TBE SMC	90-225-07-PP	2
93	FTG HYD 5/8"MORB X 1/2"MJIC	95-030-07-PP	2
94	MOTOR HYD (#101-1010-009) YELLOW	95-100-01-YL	1
95	HYDRAULIC BULKHEAD 90° FTG - 2043-8-8S	95-310-03-PP	1
96	FTG HYD BULKHEAD 2041-8-8S	95-311-10-PP	1
97	HYD. FTG ELBOW 2071-8-8S	95-316-08-PP	1
98	HYD HOSE ASSY 3/8" X 120" WB/GB	95-649-00-PP	2