WHEEL BOSS MW-2000

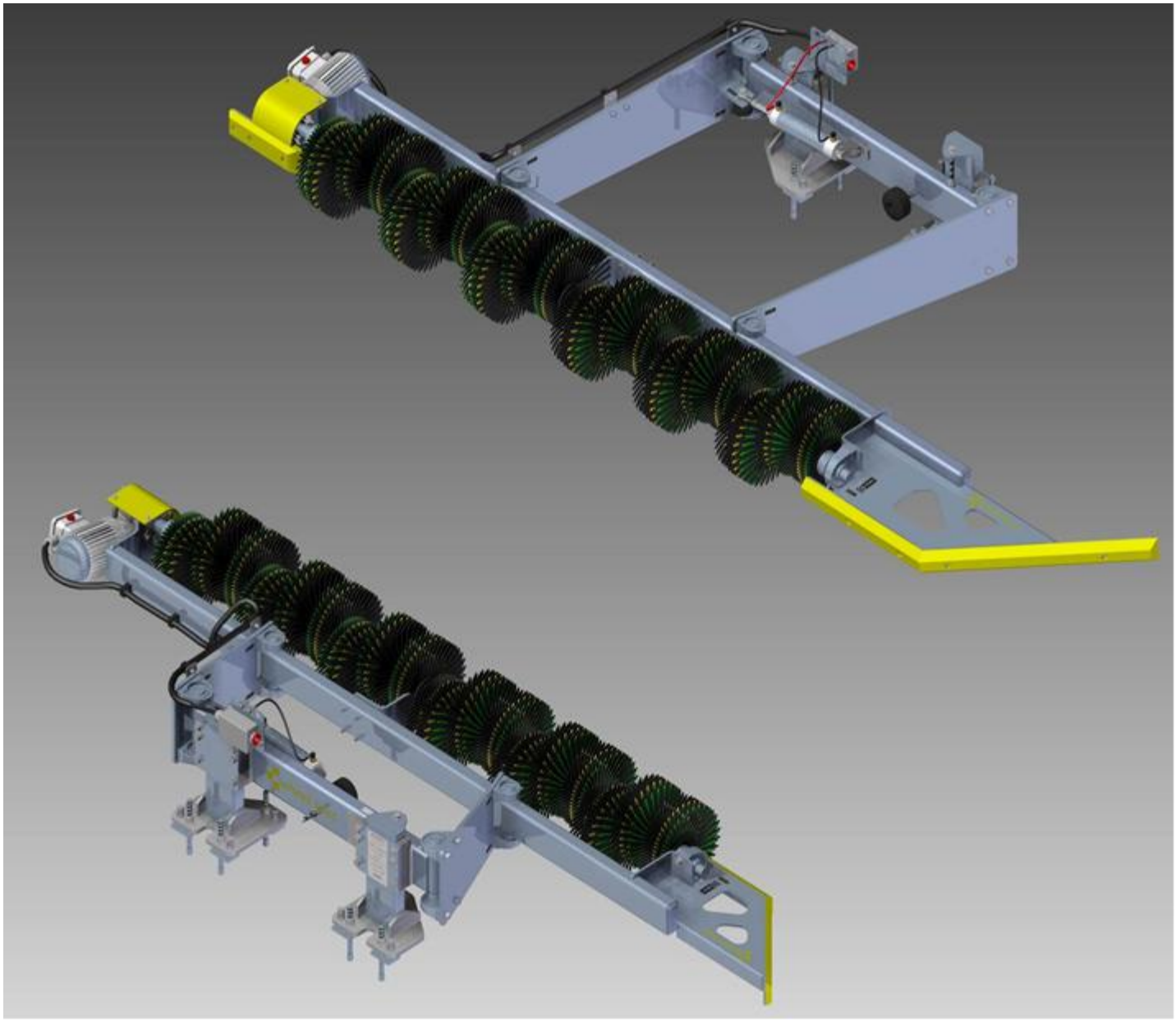

Toll Free: 800-361-7797
Phone: 705-722-7649 | Fax: 705-720-0582
Office Hours: Mon-Fri: 8:00am – 5:00pm EST

MacNeil Wash Systems Limited – Service Division
90 Welham Road
Barrie, ON L4N 8Y4

General Inquiries: info@macneilwash.com
Technical Support: techsupport@macneilwash.com

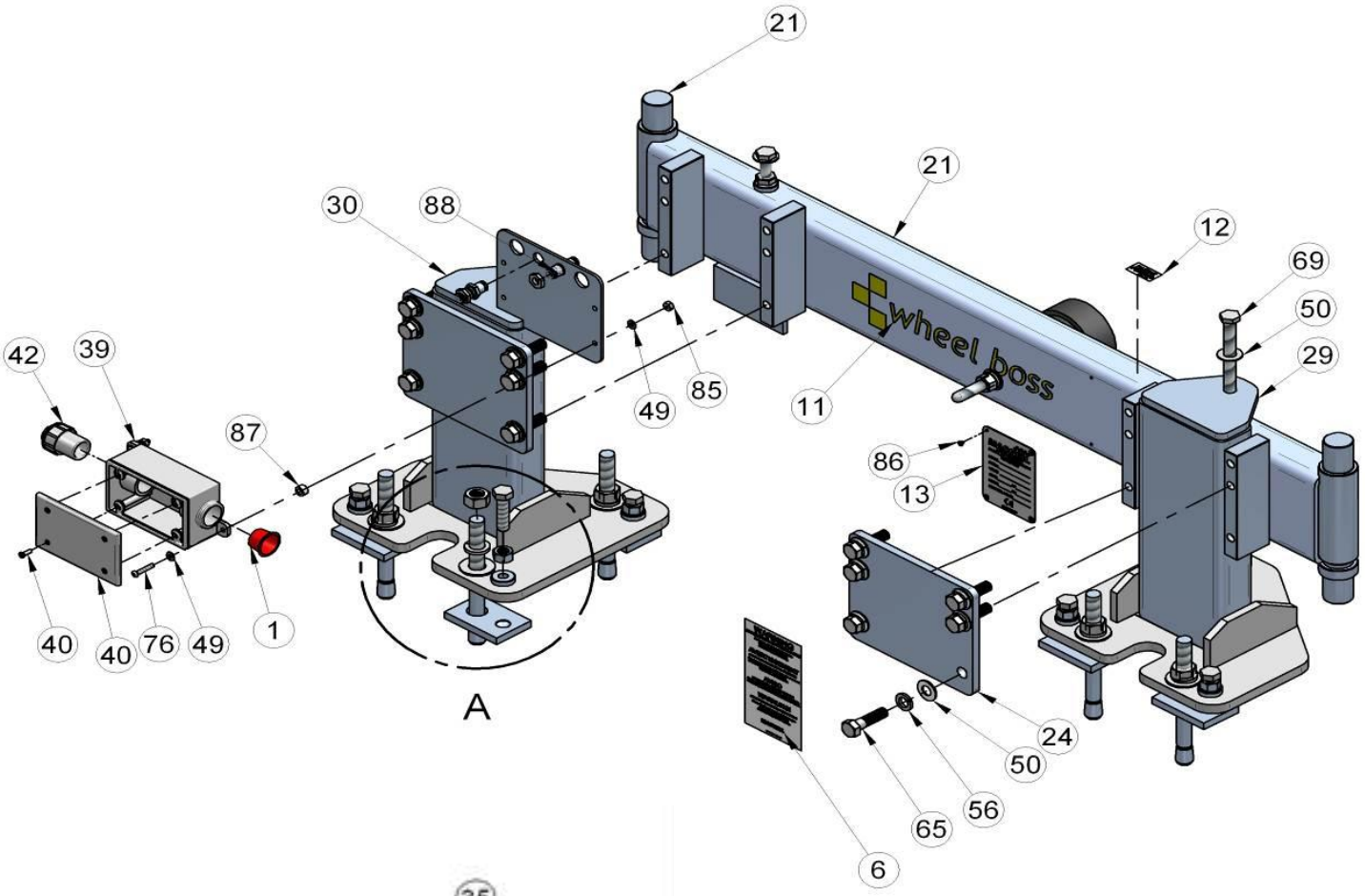
21
21
30
88
12
69
50
29
42
39
87
49
85
11
86
13
40
40
76
49
1
24
50
56
65
6
A

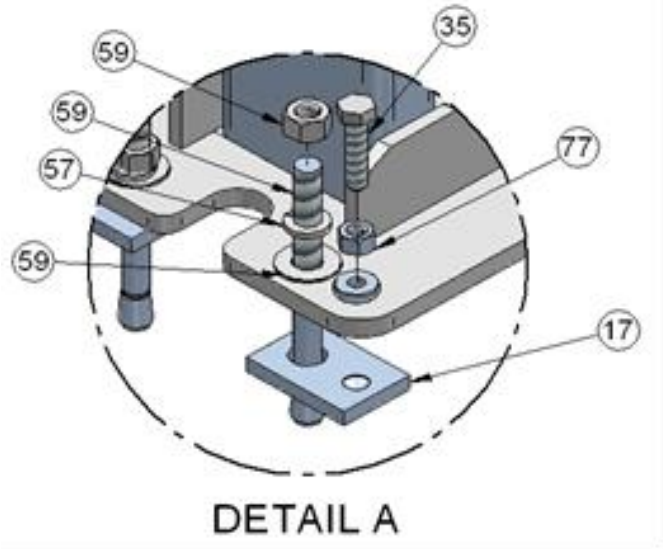
35
59
59
57
77
59
17
DETAIL A

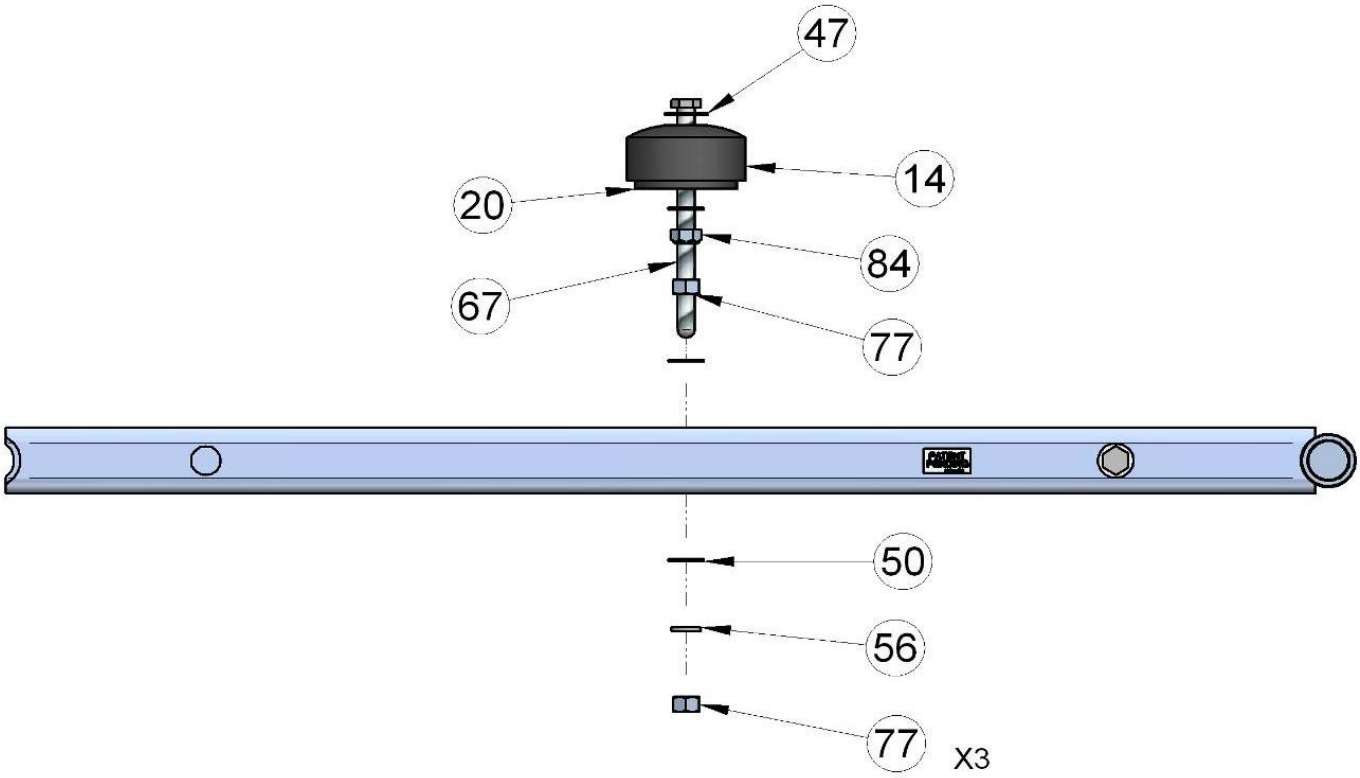
47
14
20
84
67
77
50
56
77
X3

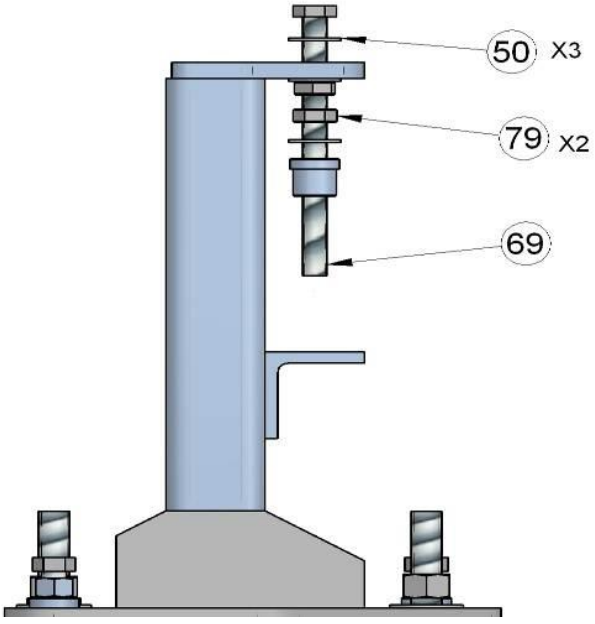
50
X3
79
X2
69

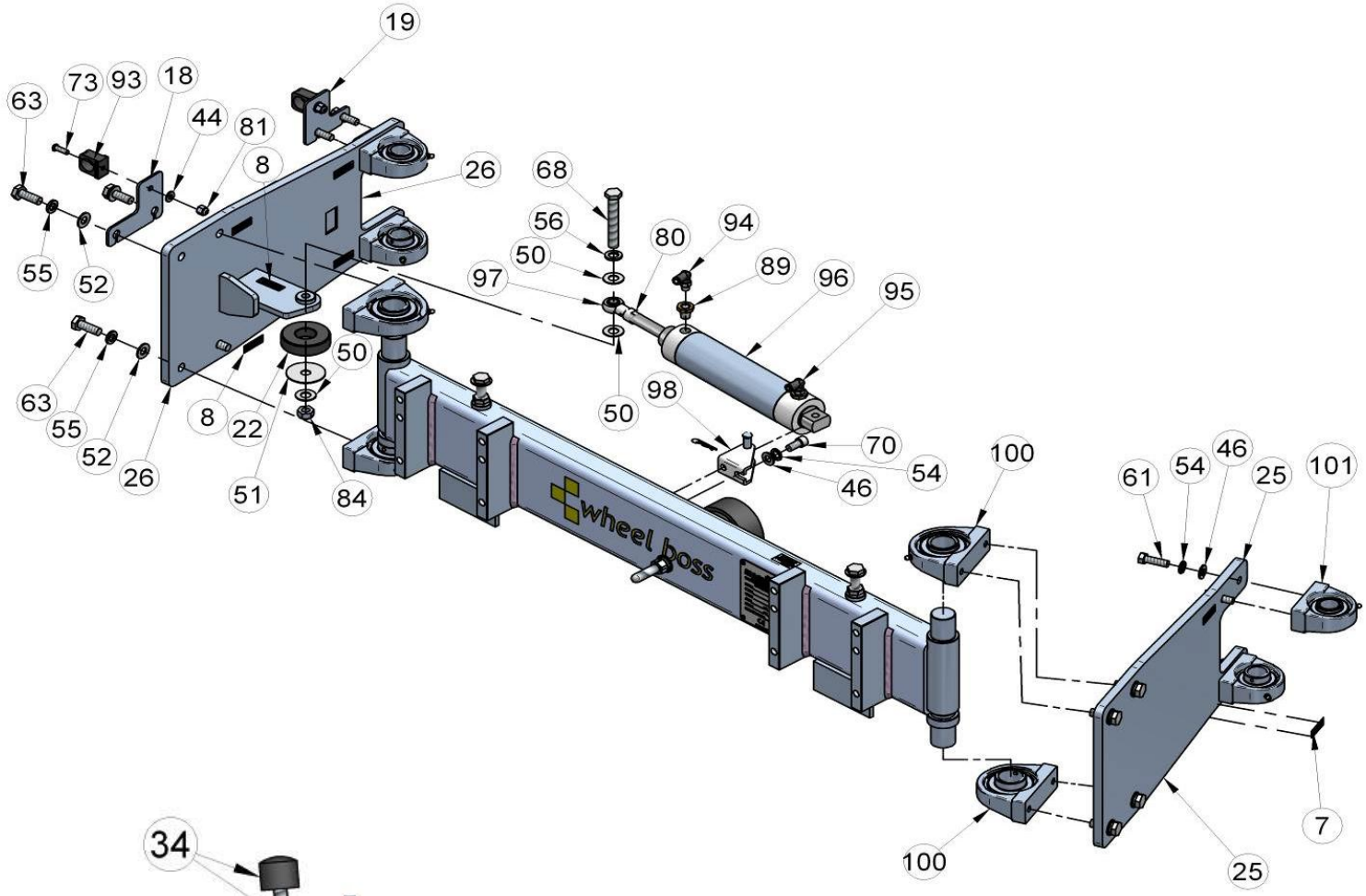
19
63
73
93
18
44
81
8
26
68
56
50
80
94
89
96
95
97
55
52
50
63
55
52
26
8
22
51
84
50
98
70
54
46
100
61
54
46
25
101
wheel boss
7
100
25

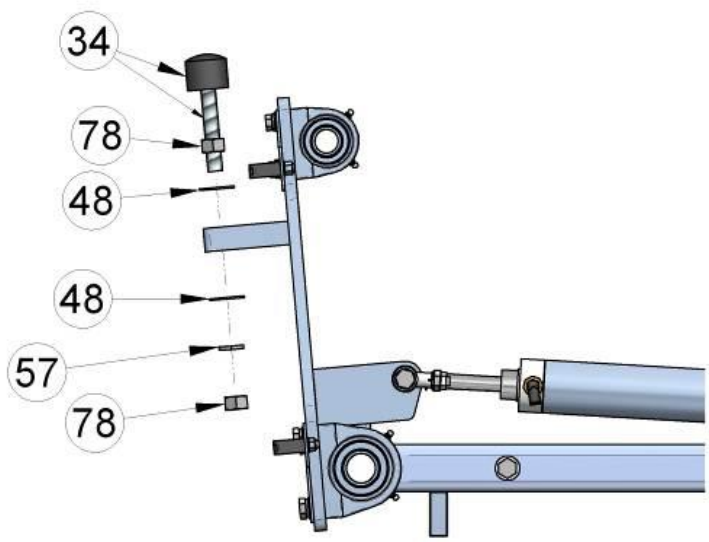
34
78
48
48
57
78

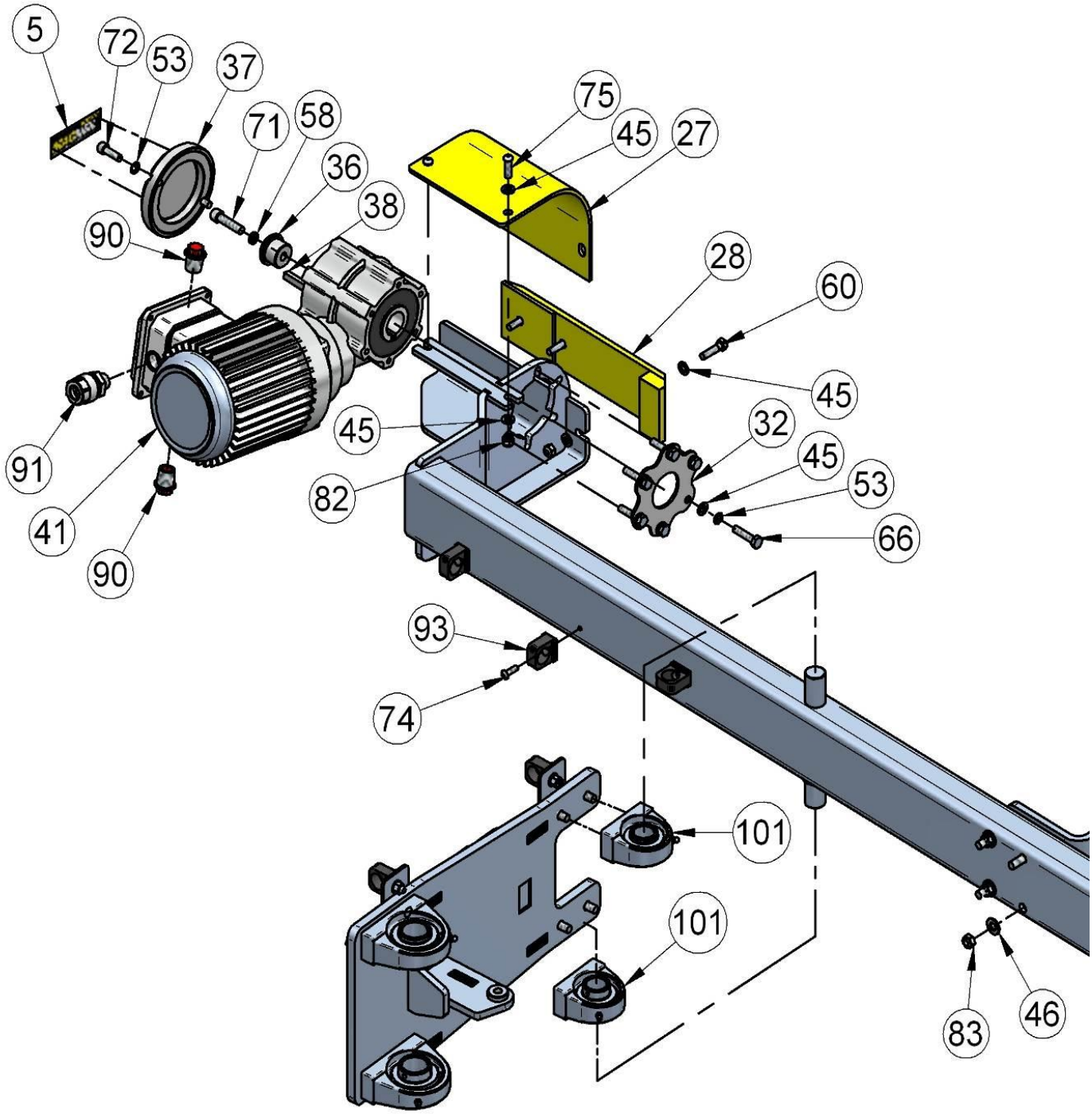
5
72
53
37
71
58
36
38
90
75
45
27
28
60
45
32
45
53
66
45
82
91
41
90
93
74
101
101
83
46

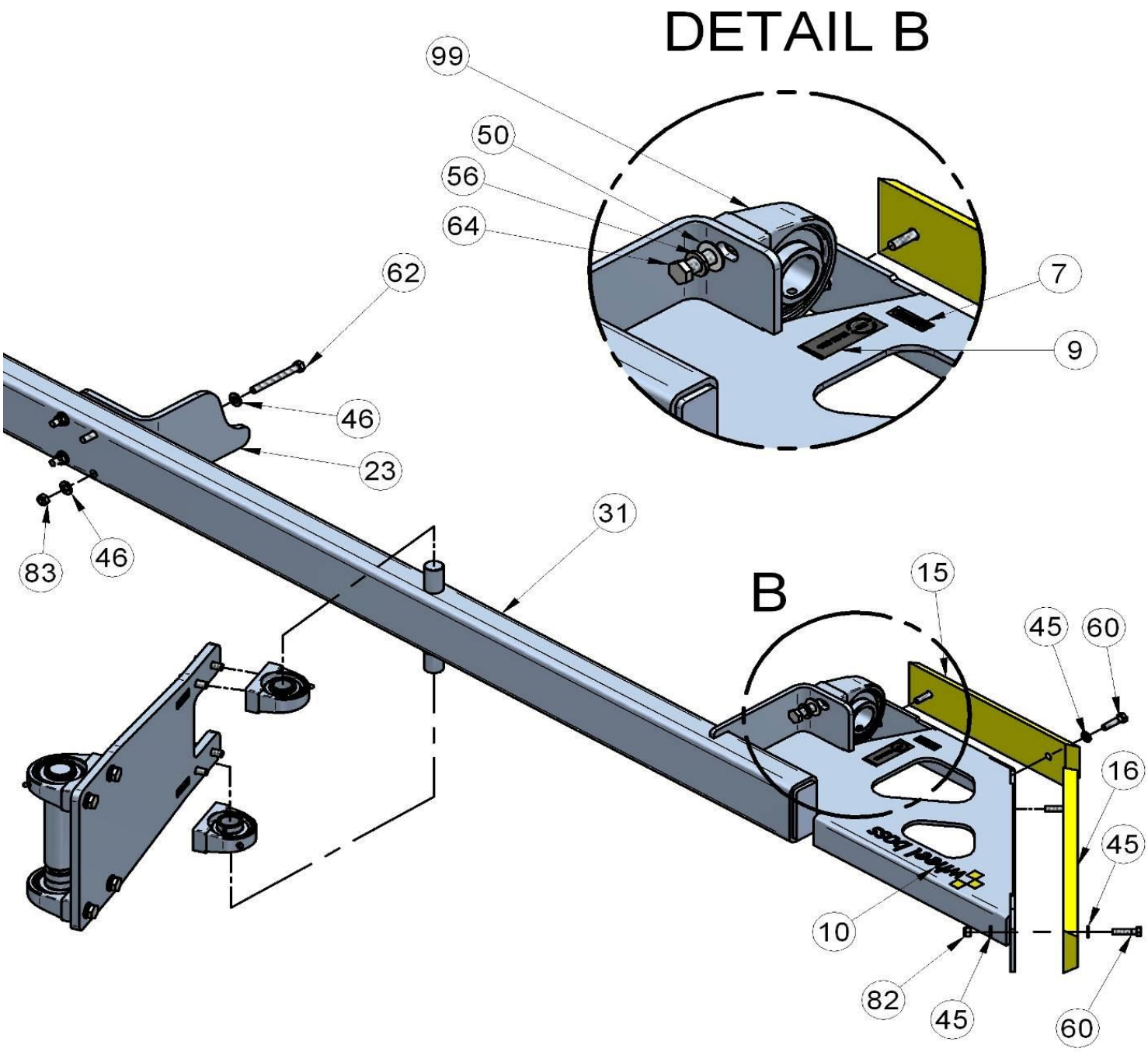
DETAIL B
99
50
56
64
62
7
9
46
23
83
46
31
B
15
45
60
16
45
10
82
45
60

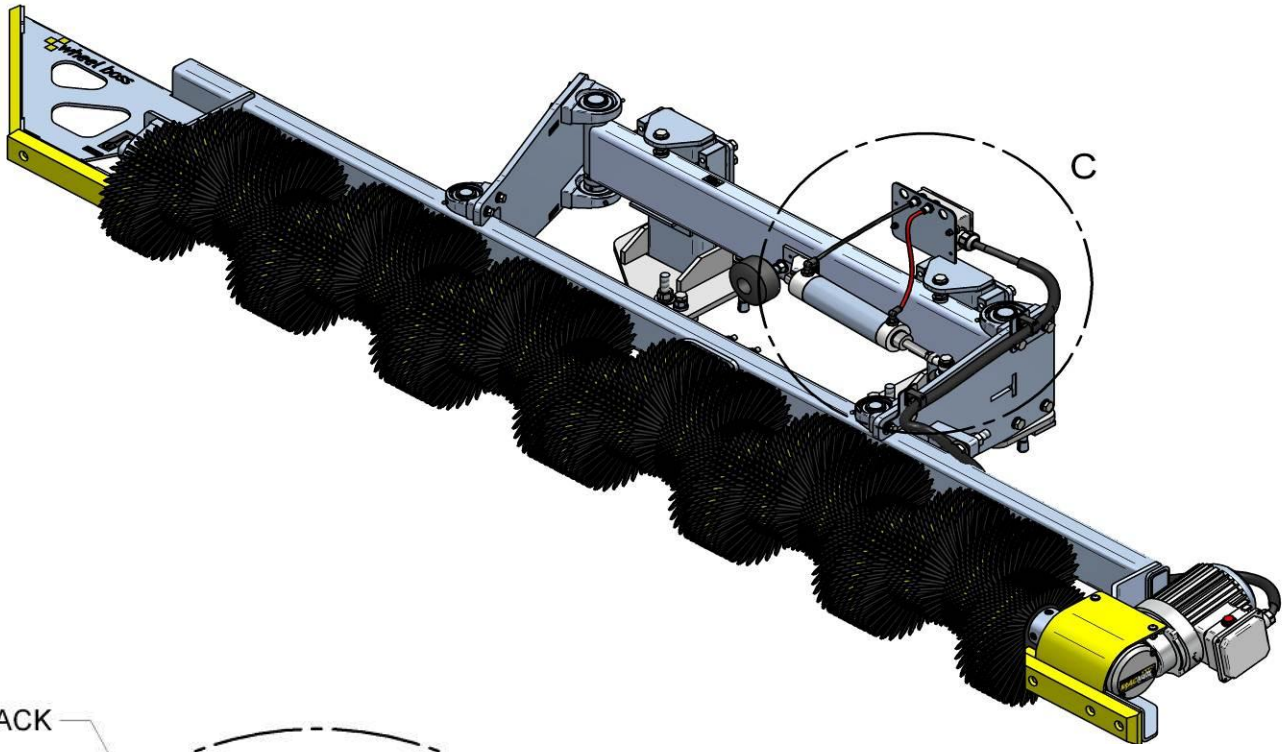

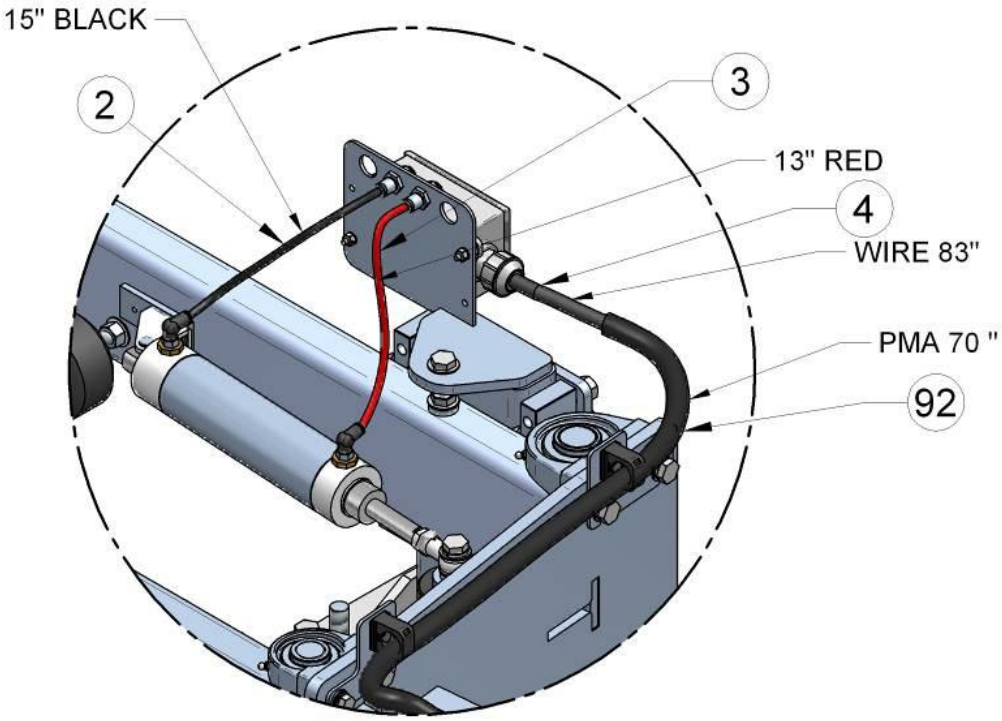

DETAIL C

REF	DESCRIPTION	PART NUMBER	QTY
1	Plug #40 Red Tapered For 1"Port 040a	05-090-14-PP	1
2	Tube Ny Black .250"Od	33-361-20-4BK	1
3	Tube Ny Red .250"Od	33-361-20-4RD	1
4	Wire 14ga-4 wire Blk	33-600-40-5BK	1
5	Decal 'MacNeil' Logo 1-1/8” X 3-3/8”	36-000-01-PP	1
6	Decal "POWDERCOAT WARNING" 6" X 3-1/2"	36-012-00-PP	1
7	Decal 'Grease Weekly' > Right –YL/BLK	36-016-02-PP	7
8	Decal 'Grease Weekly' <Left –YL/BLK	36-016-03-PP	3
9	Brush Rotation Decal 160 Rpm CCW	36-040-11-PP	1
10	DECAL WHEEL BOSS SHORT	36-041-01-PP	1
11	DECAL WHEEL BOSS LONG	36-041-02-PP	1
12	Decal 'Patent Pending' BLK ON WHITE	36-065-14-PP	1
13	MacNeil Serial Id Tag -New Logo	36-900-00-PP	1
14	Bumper Poly Black	40-370-00-PP	1
15	Horizontal UHMW Lead On	40-711-01-PP	1
16	D/S Lead On Side UHMW	40-711-02-PP	1
17	Adjuster Foot	4B-100-01-MP	6
18	Cable Mount Tab Large	4B-100-02-BK	1
19	Cable Mount Tab Small	4B-100-03-BK	1
20	Bumper Backing Disc	4B-100-04-BK	1

21	Base Weldment	4B-101-00-BK	1
22	Bumper Wheel	4B-101-06-PP	1
23	Mid Span Support	4B-102-00-BK	1
24	Clamp Plate	4B-102-02-BK	2
25	Arm High Entry Short	4B-102-03-BK	1
26	Ext Arm Weldment Left High	4B-103-00-BK	1
27	Gearbox Cover	4B-103-06-PP	1
28	Lead Out Slider	4B-103-07-PP	1
29	D/S Entrance Post	4B-104-30-BK	1
30	D/S Exit Post	4B-104-40-BK	1
31	Carrier Weldment Wb Left	4B-105-00-BK	1
32	Motor Cover Plate WB And GB	4B-525-14-PP	1
33	Adjustable Bumper Stop 4"	53-111-00-PP	1
34	Post Leveling Screw	53-150-07-MP	6
35	Gear Box Retaining Bushing SS	53-710-04-PP	1
36	Rs1000 Motor Hub	53-710-05-CL	1
37	KEY SQR 8mm X 3"LG	53-710-07-PP	1
38	Junction Box Fsc-15 Single	70-200-00-PP	1
39	Junction Box Cover 4-3/4" X 3" C/W Gskt & Hdwr	70-201-00-PP	1
40	Flender Motor 11:1 GR-160 Rpm EL (WHEEL BOSS)	70-700-60-PP	1
41	Strain Relief Kit Src-15 Threaded-Spigot	70-900-00-PP	1
42	Wheel/ Gloss Boss Hardware Kit	75-4B0-4G0-MP	1

43	Washer SS Flat 1/4"	80-104-000-SI	2
44	5/16" Id Flat Washer - Small Od	80-105-001-SI	24
45	Washer SS Flat 3/8"	80-106-000-SI	18
46	Flat Washer SS ½”	80-108-000-SI	1
47	Flat Washer 5/8" SS	80-110-000-SI	2
48	Washer Flat SS #10	80-110-000-SN	4
49	Washer Flat SS 1/2" X 1" OD	80-208-000-SI	26
50	Washer SS Flat Sae 1/2" Id X 2" Od	80-208-001-SI	1
51	Washer SS Flat SAE 7/16” ID .077 THK .921 OD	80-307-000-SI	8
52	Washer SS Lock 5/16"	80-905-000-SI	8
53	Lock Washer 3/8" SS	80-906-000-SI	10
54	Washer SS Lock 7/16"	80-907-000-SI	8
55	Lock Washer SS 1/2"	80-908-000-SI	16
56	Lock Washer 5/8" SS	80-910-000-SI	7
57	WSHR SS Lock 3/8” High Collar	81-206-000-SI	1
58	Redhead Truebolt Anchor SS 5/8" X 7"	82-210-112-ZIC	6
59	HHCS SS 5/16"-18 X 1-1/4"	82-505-020-SIC	7
60	HHCS SS 3/8"-16 X 1-1/4"	82-506-020-SIC	8
61	HHCS SS 3/8"-16 X 3-1/4"	82-506-052-SIC	4
62	HHCS SS 7/16"-14 X 1-1/4"	82-507-020-SIC	8
63	HHCS SS 1/2"-13 X 1 1/4"	82-508-020-SIC	2
64	HHCS 1/2-13 X 1 3/4" S.S.	82-508-028-SIC	12

65	HHCS SS M8 X 35 mm	82-508-035-SMC	6
66	HHCS SS 1/2"-13 X 7"	82-508-112-SIC	1
67	HHCS FL-THD SS 1/2"-13 X 3 1/2"	82-608-056-SIC	1
68	HHCS FL-THD SS 1/2"-13 X 6"	82-608-096-SIC	2
69	SHCS SS 3/8"-16 X 3/4"	82-706-012-SIC	2
70	SHCS SS 3/8-16 X 1-1/2"	82-706-024-SIC	1
71	SHCS SS M8 X 25mm (1"LG)	82-708-025-SMC	2
72	Screw Ss Btn-Hd 1/4"-20 X 3/4"	83-204-012-SIC	2
73	Screw Ss Btn-Hd 1/4"-28 X 3/4"	83-204-012-SIF	3
74	Screw SS BTN-HD HEX 5/16” -18 X 1”	83-205-016-SIC	2
75	Screw PHL PAN-HD SS #10-24 X 1"	83-510-016-SNC	2
76	Nut SS 1/2"-13	84-008-000-SIC	8
77	Nut SS 5/8"-11	84-010-000-SIC	2
78	Nut SS Jam 1/2"-13	84-108-000-SIC	4
79	Nut SS Jam ½” – 20	84-108-000-SIF	1
80	Nut SS Nylock 1/4"-20	85-004-000-SIC	2
81	Nylock Nut 5-/16" -18	85-005-000-SIC	9
82	Nut SS Nylock 3/8"-16	85-006-000-SIC	4
83	Nut SS Nylock 1/2"-13	85-008-000-SIC	2
84	Nut Nylock SS #10-24	85-010-240-SIC	2
85	Rivet Al 1/8"Dia Pr-100-Ai	87-002-000-AI	4
86	Spacer NY 1/2"Dia X 1/4" SP217	89-008-004-NI	2

87	Air Bulkhead Union 1/4"Tbe X 1/4"Tbe	90-005-01-PP	2
88	Bushing Reducer 1/4" Mnpt-1/8" Fnpt Br 110-Ba	90-030-00-PP	2
89	1/2" Npt Plug-Red P48-B	90-054-08-PP	2
90	Strain Relief 1/2" C/W Nut & Oring O5534w	90-055-04-PP	1
91	PMA Flex Conduit OD 21.2mm X ID 16mm	90-068-01-PP	1
92	PMA Support U Clip W/Cap Supply Fh-16	90-068-04-PP	5
93	Restrictor Fitting 90 Deg 1/4 Tube 0.4 Mm Orifice	90-071-14-PP	1
94	Restrictor Fitting 90 Deg 1/4 Tube 1.4 Mm Orifice	90-071-21-PP	1
95	Cylinder Air 2" Dia X 6" Stroke	90-100-01-PP	1
96	Rod End SS-Phsb8 1/2"F-20 C/Wgr Npl10-32	90-151-02-PP	1
97	Pivot Bracket SS C/W Pin & Clip Bp-19css	90-174-00-PP	1
98	Suc208-24 Tapped Base Bearing	90-196-01-PP	1
99	Suc206-20 Tapped Base Bearing	90-196-02-PP	4
100	Suc205-16 Tapped Base Bearing	90-196-03-PP	4

PASSENGER SIDE

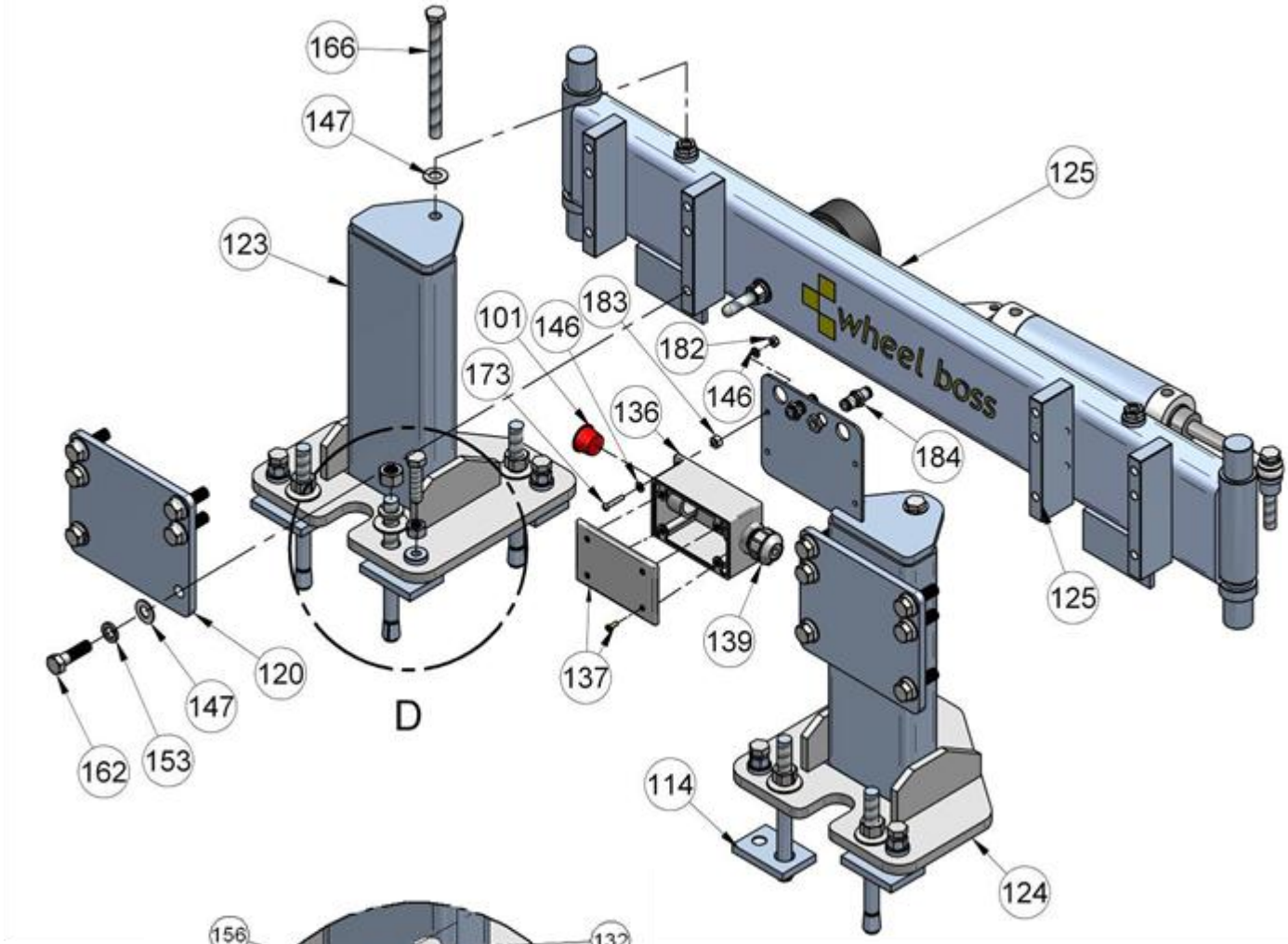

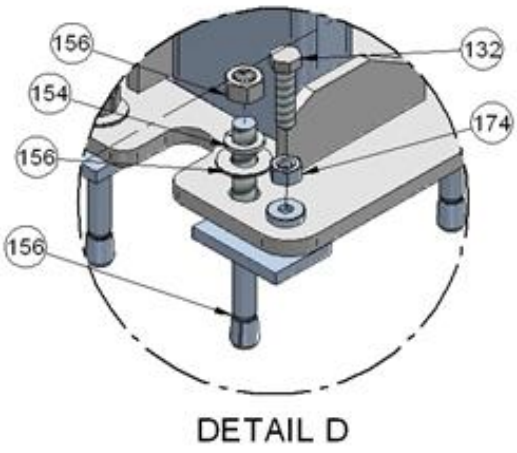

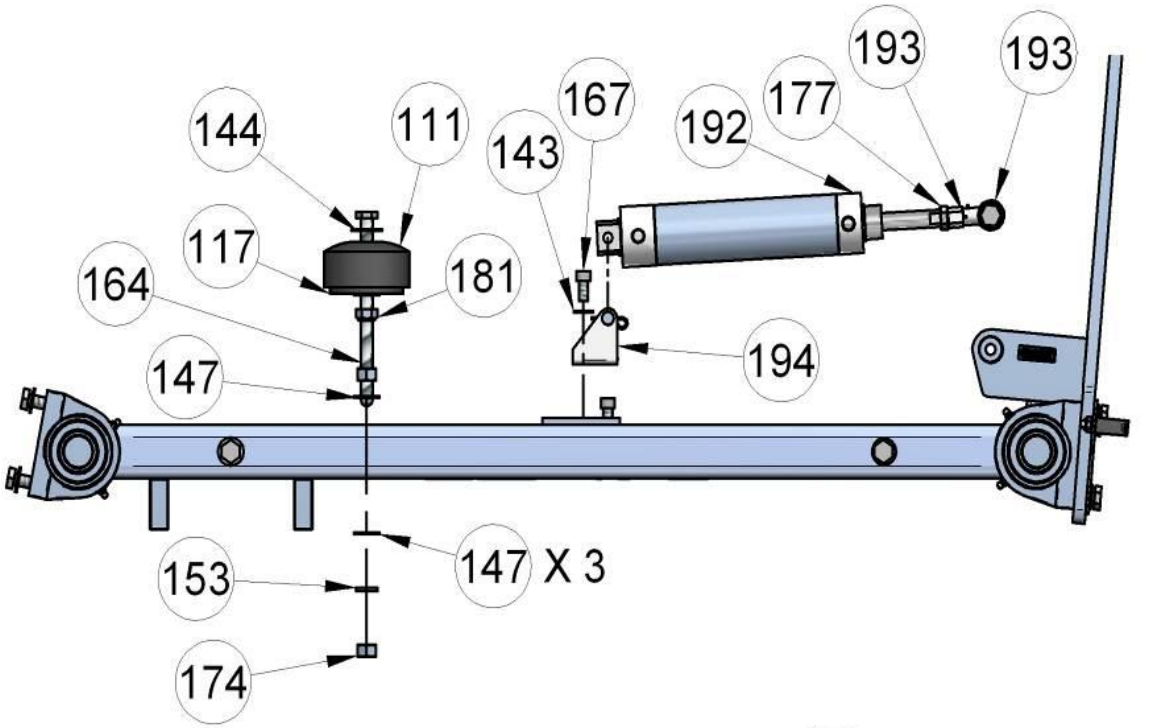
193
193
144
111
167
143
192
177
117
181
164
194
147
147 X 3
153
174

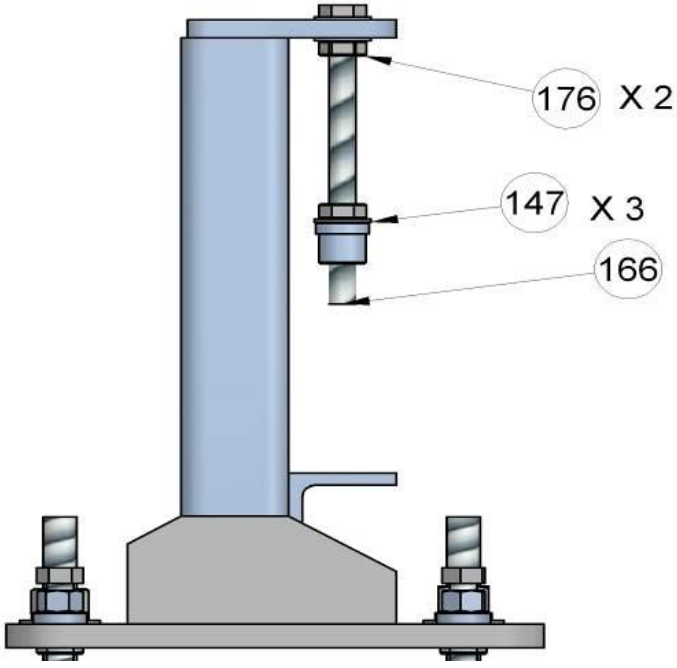
176 X 2
147 X 3
166

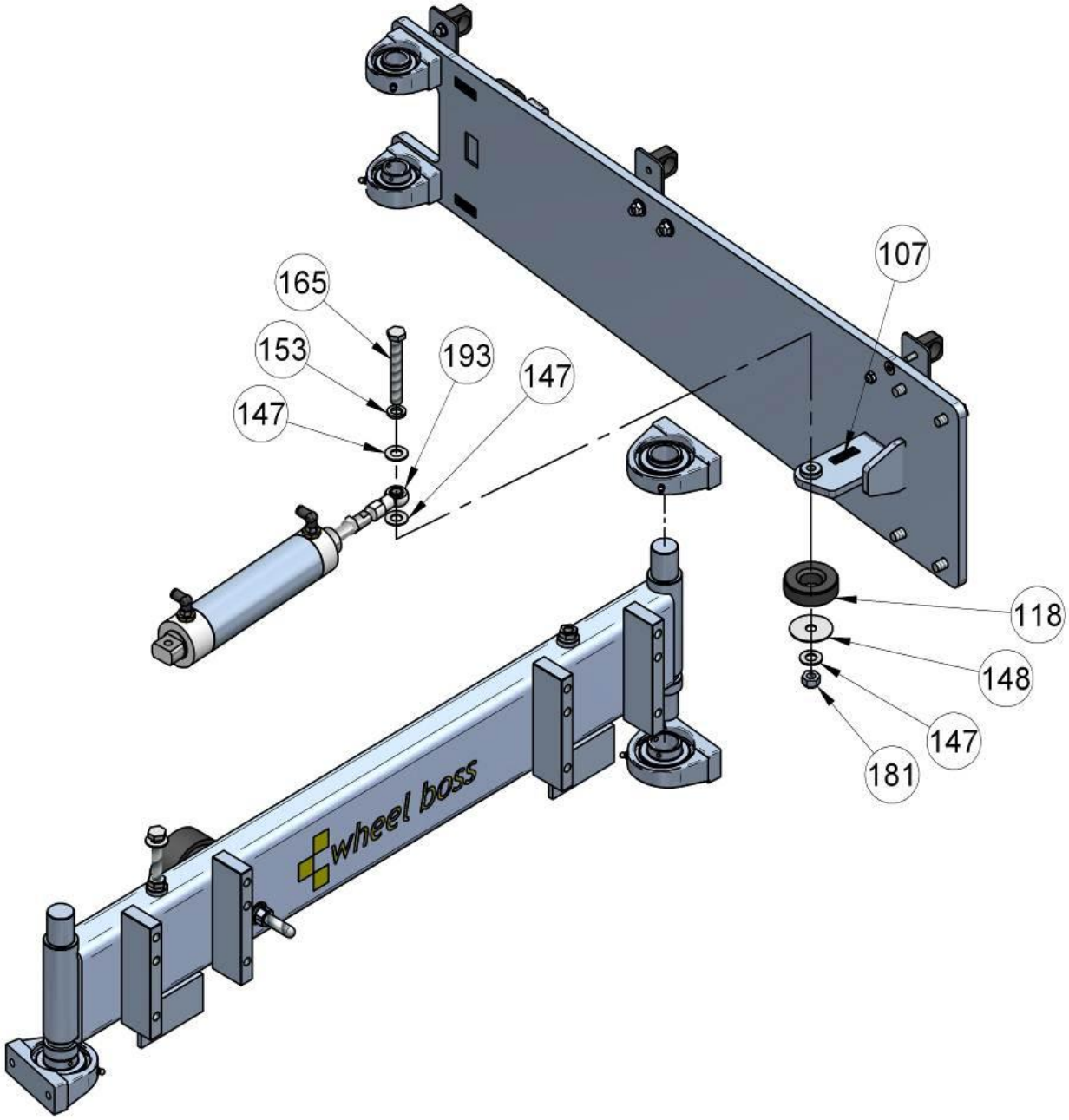
107
165
153
193
147
147
118
148
147
181
wheel boss

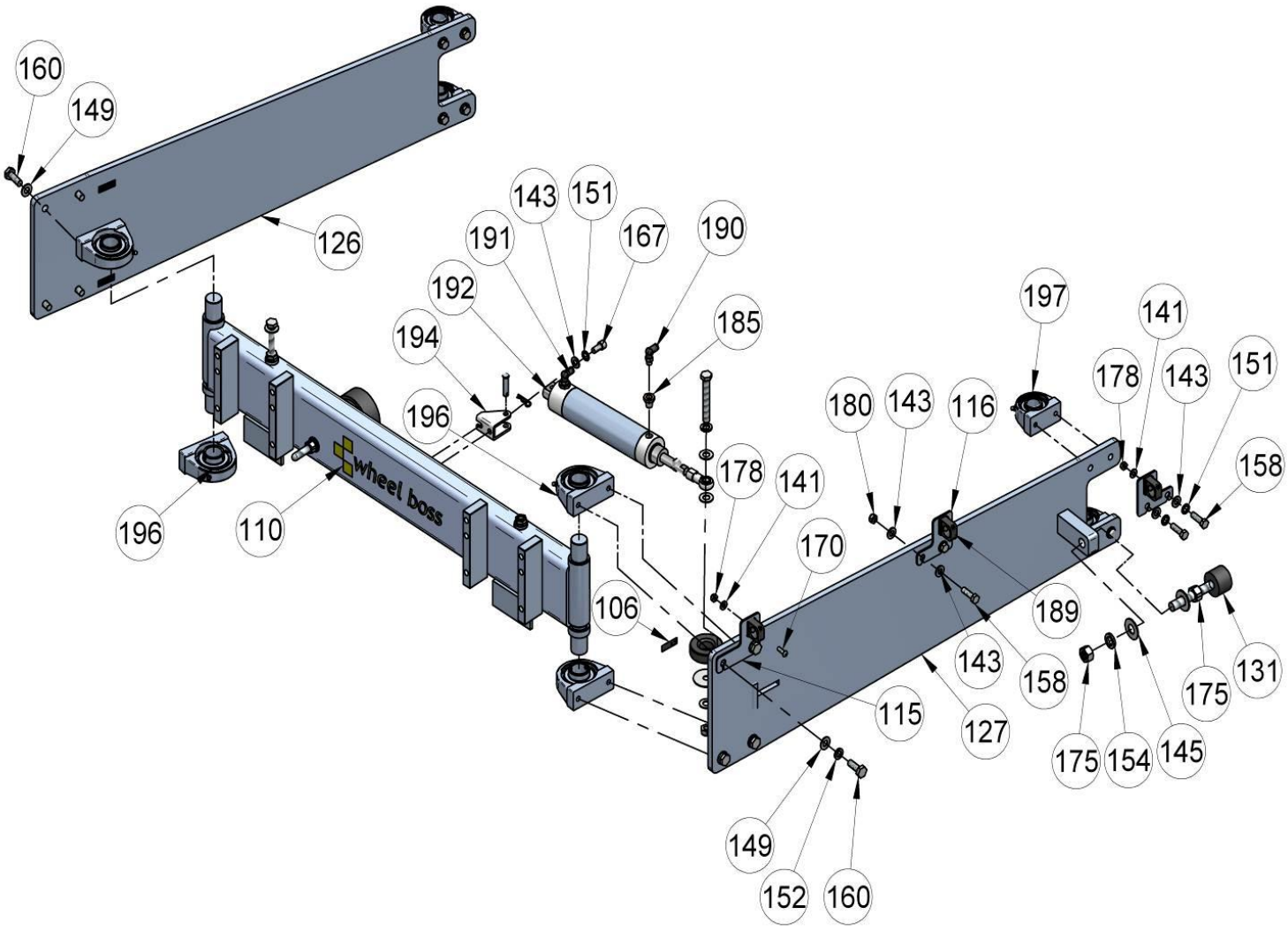
160
149
126
143
151
191
167
190
192
185
194
196
197
141
178
143
151
180
143
116
158
178
141
170
196
110
wheel boss
106
189
143
158
131
175
115
127
175
154
145
149
152
160

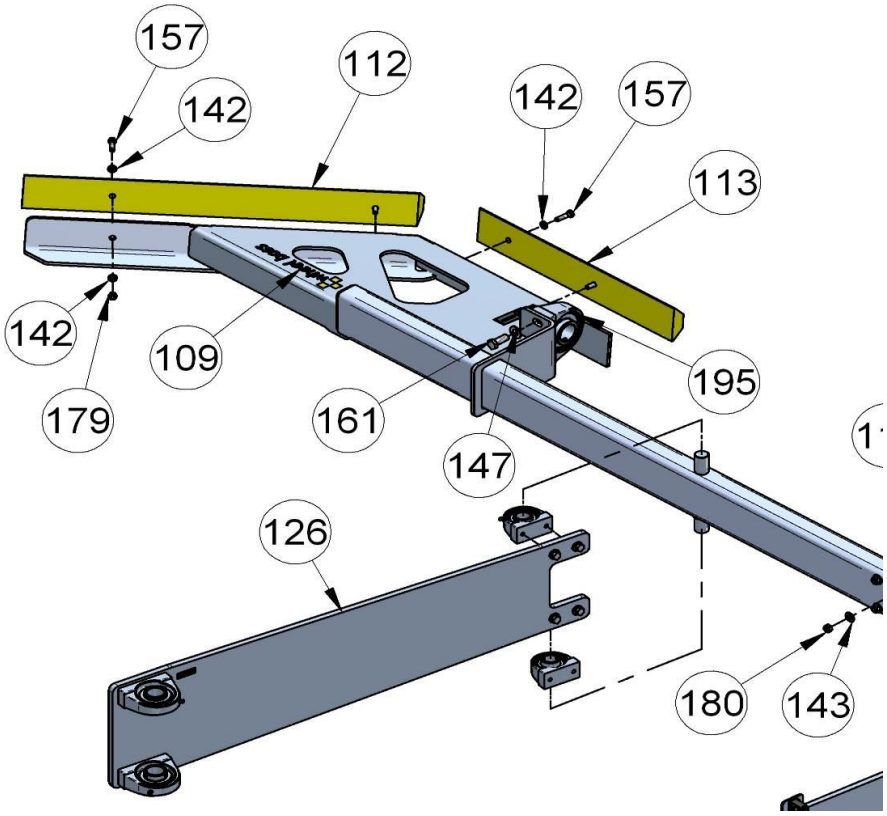
157
142
112
142
157
113
142
109
179
161
147
195
126
180
143

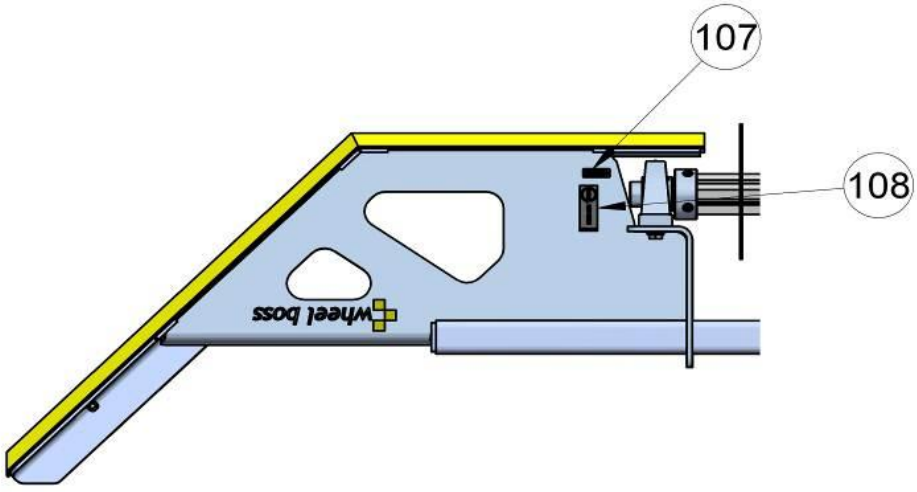
107
108
wheel boss

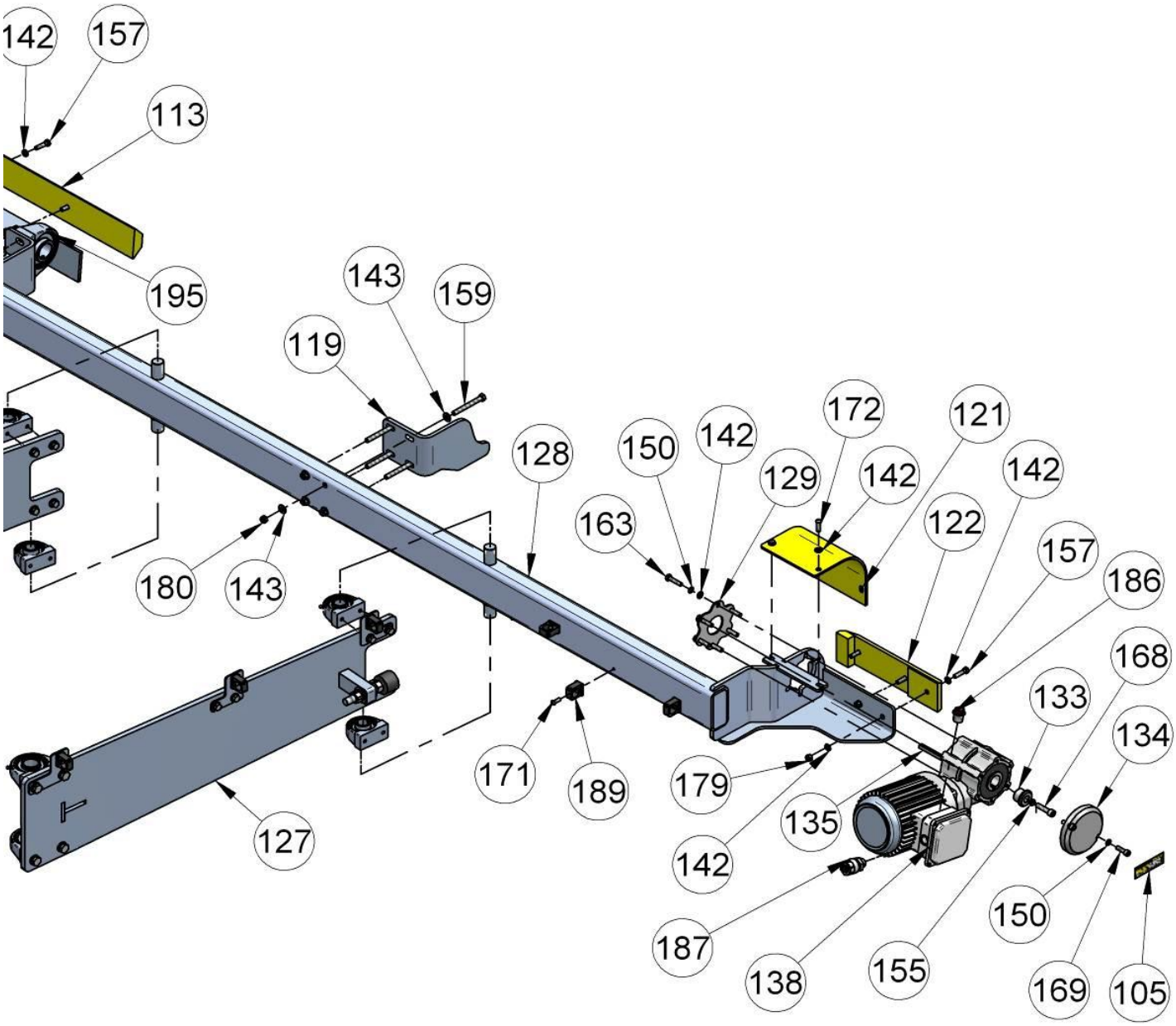
142
157
113
195
143
159
119
128
150
142
172
121
129
142
142
163
122
157
186
180
143
168
133
134
171
189
179
135
127
142
150
187
138
155
169
105

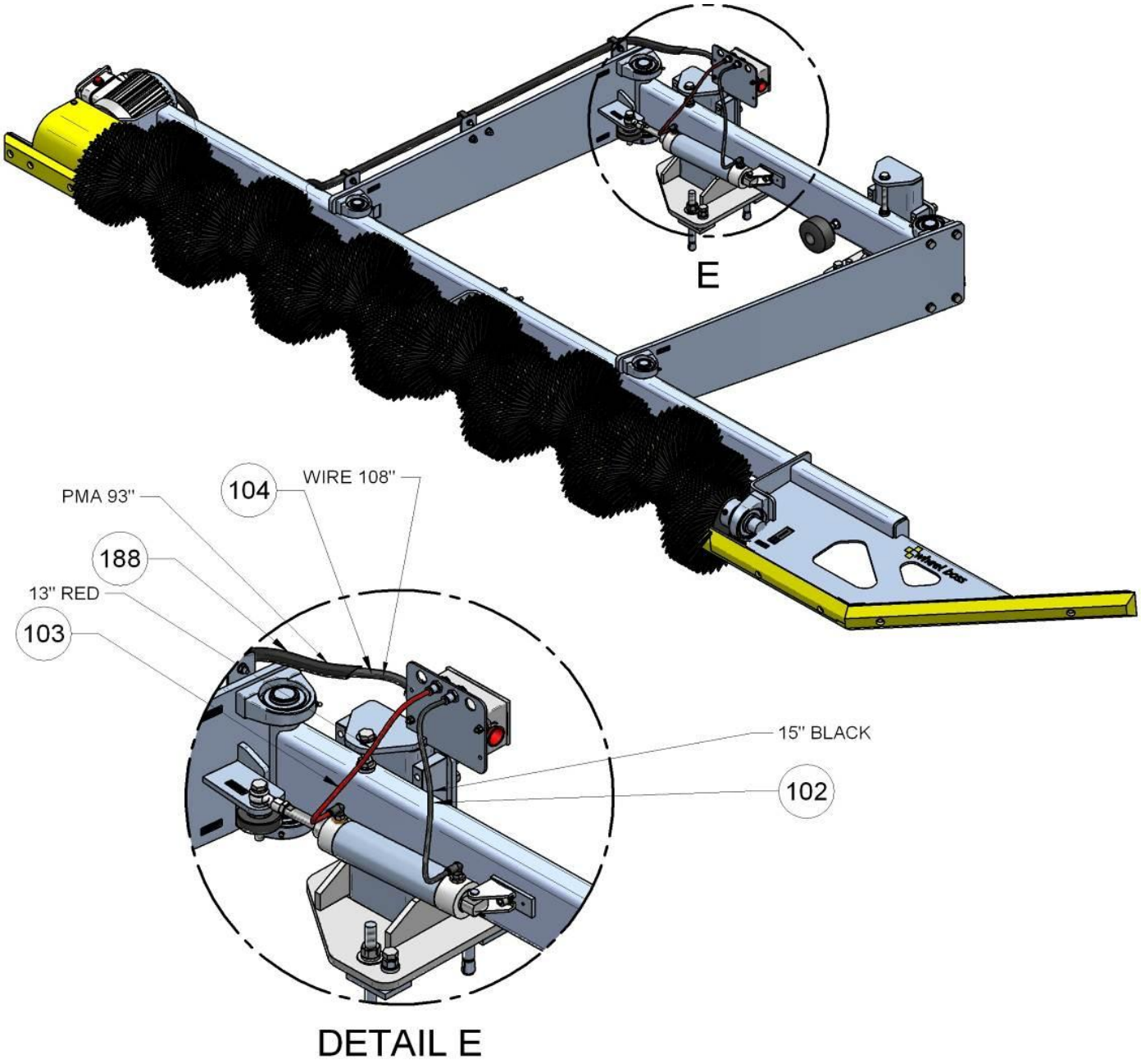
E
104
WIRE 108"
PMA 93"
188
13" RED
103
15" BLACK
102
DETAIL E

REF.	DESCRIPTION	PART NO.	QTY
101	Plug #40 Red Tapered For 1"Port 040a	05-090-14-PP	1
102	Tube Ny Black .250"Od	33-361-20-4BK	1
103	Tube Ny Red .250"Od	33-361-20-4RD	1
104	Wire 14ga-4wire Blackk	33-600-40-5BK	1
105	Decal 'MacNeil' Logo 1-1/8” X 3-3/8”	36-000-01-PP	1
106	Decal 'Grease Weekly' > Right –YL/BLK	36-016-02-PP	2
107	Decal 'Grease Weekly' <Left –YL/BLK	36-016-03-PP	8
108	Brush Rotation Decal 160 Rpm CCW	36-040-12-PP	1
109	Decal Wheel Boss Short	36-041-01-PP	1
110	Decal Wheel Boss Long	36-041-02-PP	1
111	Bumper Poly Black	40-370-00-PP	1
112	Diagonal UHMW Lead On	40-710-01-MP	1
113	Horizontal UHMW Lead On	40-710-02-MP	1
114	Adjuster Foot	4B-100-01-MP	6
115	Cable Mount Tab Large	4B-100-02-BK	1
116	Cable Mount Tab Small	4B-100-03-BK	2
117	Bumper Backing Disc	4B-100-04-BK	1
118	Bumper Wheel	4B-101-06-PP	1
119	Mid Span Support	4B-102-00-BK	1
120	Clamp Plate	4B-102-02-BK	2

121	Gearbox Cover	4B-103-06-PP	1
122	Lead Out Slider	4B-103-07-PP	1
123	P/S Entrance Post	4B-104-50-BK	1
124	P/S Exit Post	4B-104-60-BK	1
125	Base Weldment Right	4B-201-00-BK	1
126	Arm High Entry Long	4B-202-03-BK	1
127	Exit Arm Weldment Right High	4B-203-00-BK	1
128	Carrier Weldment Wb Right	4B-205-00-BK	1
129	Motor Cover Plate Wb And Gb	4B-525-14-PP	1
130	Adjustable Bumper Stop 4"	53-111-00-PP	1
131	Post Leveling Screw	53-150-07-MP	6
132	Gear Box Retaining Bushing SS	53-710-04-PP	1
133	Rs1000 Motor Hub	53-710-05-CL	1
134	KEY SQR 8mm X 3"LG	53-710-07-PP	1
135	Junction Box Fsc-15 Single	70-200-00-PP	1
136	Junction Box Cover 4-3/4" X 3" C/W Gskt & Hdwr	70-201-00-PP	1
137	Flender Motor 11:1 GR-160 Rpm EL (WHEEL BOSS)	70-700-60-PP	1
138	Strain Relief Kit Src-15 Threaded-Spigot	70-900-00-PP	1
139	Wheel/ Gloss Boss Hardware Kit	75-4B0-4G0-MP	1
140	Washer SS Flat 1/4"	80-104-000-SI	3
141	5/16" Id Flat Washer - Small Od	80-105-001-SI	24
142	Washer SS Flat 3/8"	80-106-000-SI	22

143	Flat Washer SS ½”	80-108-000-SI	1
144	Flat Washer 5/8" SS	80-110-000-SI	2
145	Washer Flat SS #10	80-110-000-SN	4
146	Washer Flat SS 1/2" X 1" OD	80-208-000-SI	26
147	Washer SS Flat Sae 1/2" Id X 2" Od	80-208-001-SI	1
148	Washer SS Flat SAE 7/16” ID .077 THK .921 OD	80-307-000-SI	8
149	Washer SS Lock 5/16"	80-905-000-SI	8
150	Lock Washer 3/8" SS	80-906-000-SI	10
151	Washer SS Lock 7/16"	80-907-000-SI	8
152	Lock Washer SS 1/2"	80-908-000-SI	16
153	Lock Washer 5/8" SS	80-910-000-SI	7
154	WSHR SS Lock 3/8” High Collar	81-206-000-SI	1
155	Redhead Truebolt Anchor SS 5/8" X 7"	82-210-112-ZIC	6
156	HHCS SS 5/16"-18 X 1-1/4"	82-505-020-SIC	7
157	HHCS SS 3/8"-16 X 1-1/4"	82-506-020-SIC	10
158	HHCS SS 3/8"-16 X 3-1/4"	82-506-052-SIC	4
159	HHCS SS 7/16"-14 X 1-1/4"	82-507-020-SIC	8
160	HHCS SS 1/2"-13 X 1 1/4"	82-508-020-SIC	2
161	HHCS 1/2-13 X 1 3/4" S.S.	82-508-028-SIC	12
162	HHCS SS M8 X 35 mm	82-508-035-SMC	6
163	HHCS SS 1/2"-13 X 7"	82-508-112-SIC	1
164	HHCS FL-THD SS 1/2"-13 X 3 1/2"	82-608-056-SIC	1

165	HHCS FL-THD SS 1/2"-13 X 6"	82-608-096-SIC	2
166	SHCS SS 3/8"-16 X 3/4"	82-706-012-SIC	2
167	SHCS SS 3/8-16 X 1-1/2"	82-706-024-SIC	1
168	SHCS SS M8 X 25mm (1"LG)	82-708-025-SMC	2
169	Screw Ss Btn-Hd 1/4"-20 X 3/4"	83-204-012-SIC	3
170	Screw Ss Btn-Hd 1/4"-28 X 3/4"	83-204-012-SIF	3
171	Screw SS BTN-HD HEX 5/16” -18 X 1”	83-205-016-SIC	2
172	Screw PHL PAN-HD SS #10-24 X 1"	83-510-016-SNC	2
173	Nut SS 1/2"-13	84-008-000-SIC	8
174	Nut SS 5/8"-11	84-010-000-SIC	2
175	Nut SS Jam 1/2"-13	84-108-000-SIC	4
176	Nut SS Jam ½” – 20	84-108-000-SIF	1
177	Nut SS Nylock 1/4"-20	85-004-000-SIC	3
178	Nylock Nut 5-/16" -18	85-005-000-SIC	9
179	Nut SS Nylock 3/8"-16	85-006-000-SIC	6
180	Nut SS Nylock 1/2"-13	85-008-000-SIC	2
181	Nut Nylock SS #10-24	85-010-240-SIC	2
182	Spacer NY 1/2"Dia X 1/4" SP217	89-008-004-NI	2
183	Air Bulkhead Union 1/4"Tbe X 1/4"Tbe	90-005-01-PP	2
184	Bushing Reducer 1/4" Mnpt-1/8" Fnpt Br 110-Ba	90-030-00-PP	2
185	1/2" Npt Plug-Red P48-B	90-054-08-PP	2
186	Strain Relief 1/2" C/W Nut & Oring O5534w	90-055-04-PP	1

187	PMA Flex Conduit OD 21.2mm X ID 16mm	90-068-01-PP	1
188	PMA Support U Clip W/Cap Supply Fh-16	90-068-04-PP	6
189	Restrictor Fitting 90 Deg 1/4 Tube 0.4 Mm Orifice	90-071-14-PP	1
190	Restrictor Fitting 90 Deg 1/4 Tube 1.4 Mm Orifice	90-071-21-PP	1
191	Cylinder Air 2" Dia X 6" Stroke	90-100-01-PP	1
192	Rod End SS-Phsb8 1/2"F-20 C/Wgr Npl10-32	90-151-02-PP	1
193	Pivot Bracket SS C/W Pin & Clip Bp-19css	90-174-00-PP	1
194	Suc208-24 Tapped Base Bearing	90-196-01-PP	1
195	Suc206-20 Tapped Base Bearing	90-196-02-PP	4
196	Suc205-16 Tapped Base Bearing	90-196-03-PP	4

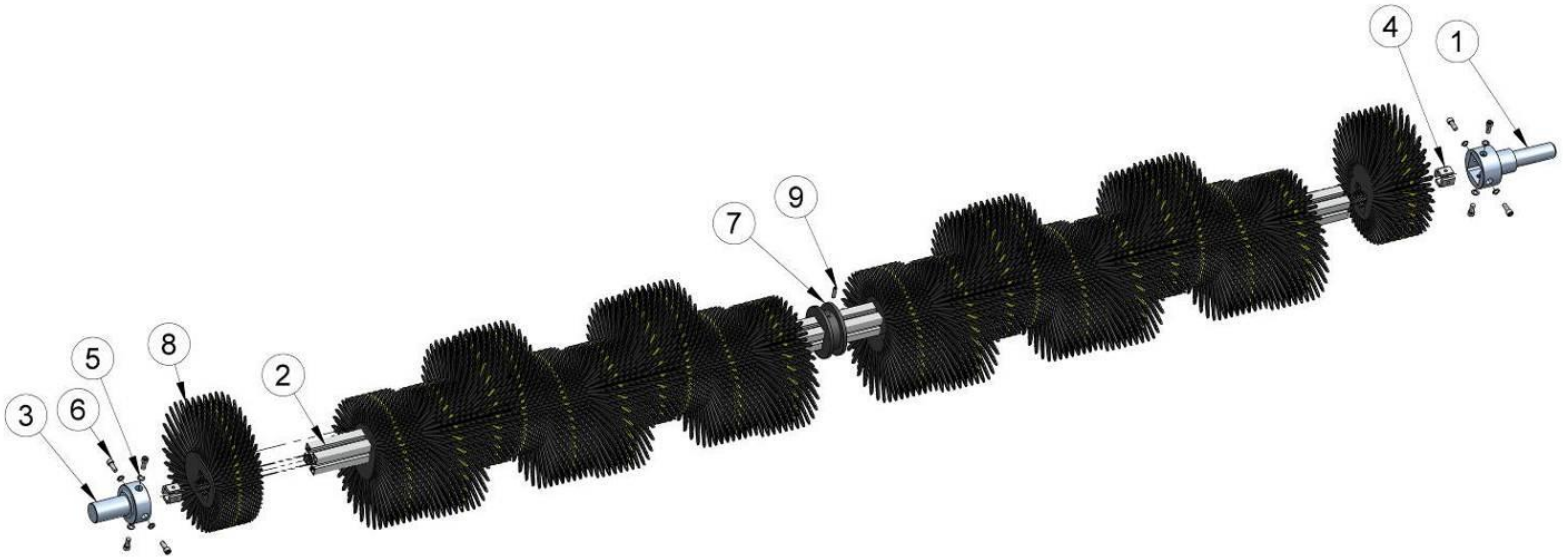

REF.	DESCRIPTION	PART NUMBER	QTY.
1	Gearbox End Insert	40-750-03-MP	1
2	Wheel Brush Extruded Shaft	40-750-08-MP	1
3	Bearing End Insert	4B-650-02-MP	1
4	T-Nut - 5/16"-18	40-750-06-PP	8
5	Washer High Collar Lock 8mm SS	81-208-000-SM	8
6	SHCS SS 5/16"-18 X 3/4"	82-705-012-SIC	8
7	Mid Span Support Bobbin	40-750-01-MP	1
8	Wheel Boss Brush Section	40-745-00-MP	24
9	Hex Socket Set Screw, 1/4-20 X 1" SS	83-704-016-SIC	1